general notes:

1. CONTACT "UNDERGROUND SERVICE ALERT OF NORTHERN CALIFORNIA" BY PHONE AT 8-1-1 FORTY-EIGHT (48) HOURS PRIOR TO START OF CONSTRUCTION FOR LOCATION OF POWER, TELEPHONE, OIL AND NATURAL GAS UNDERGROUND FACILITIES.
2. CONTACT THE APPROPRIATE AGENCY FOR THE LOCATION OF CABLE T.V., WATER, SEWER, DRAINAGE OR UNDERGROUND FACILITIES.
3. THE CONTRACTOR SHALL POSSESS A CLASS A LICENSE AT THE TIME OF BID OPENING AND FOR THE DURATION OF THE PROJECT.

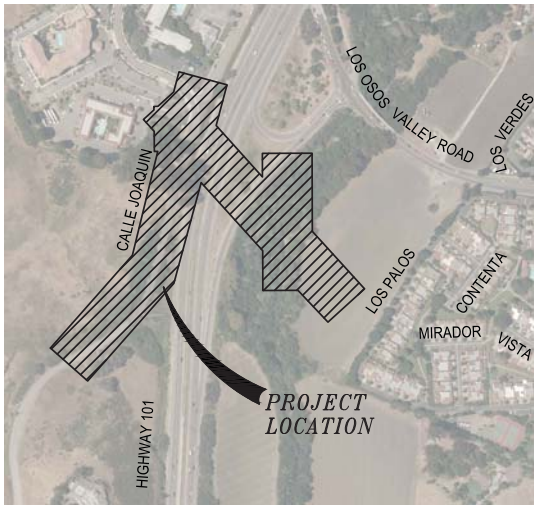

LOCATION MAP

SCALE: 1" = 250'

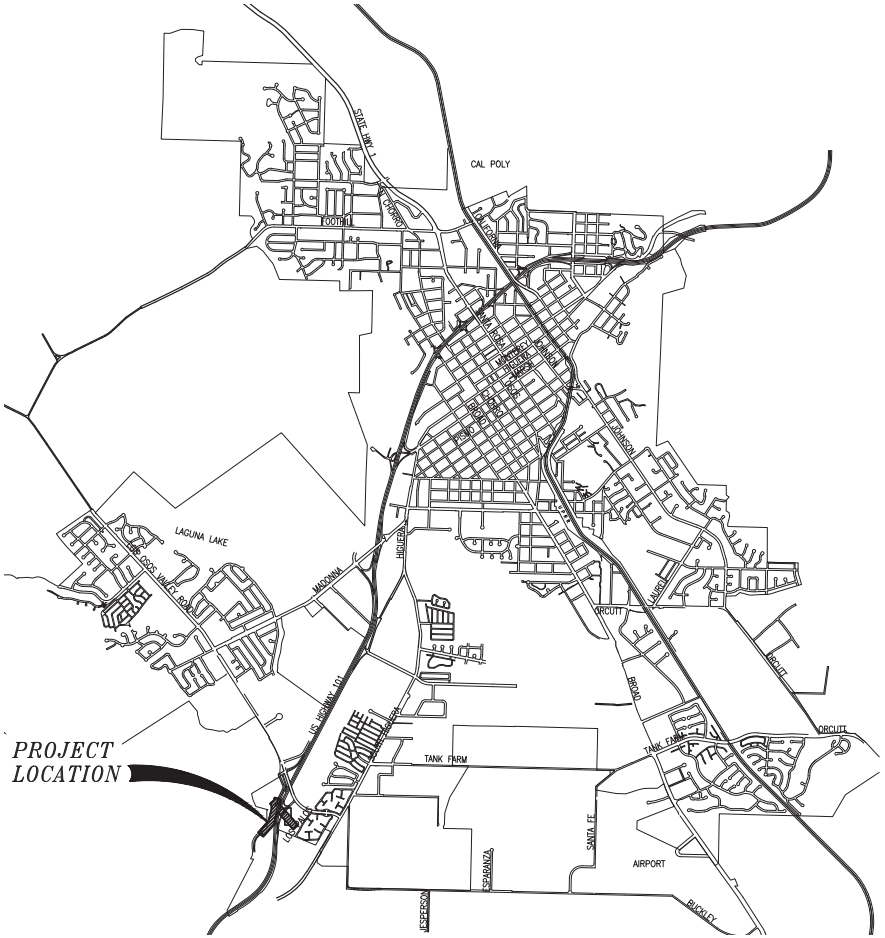

SAN LUIS OBISPO AND VICINITY MAP

SCALE: 1" = 2000'

SCALE

0 1000 2000 4000

1 INCH = 2000 FEET

index to plans

Sht. No.	Sht. Title	Description
1	G-001	COVER SHEET
2	G-002	SHEET LAYOUT
3	G-003	LEGEND, ABBREVIATIONS AND NOTES
4	G-004	SURVEY CONTROL DATA AND TEMPORARY CONSTRUCTION EASEMENTS
5	C-101	HIGHWAY 101 CROSSING - PLAN AND PROFILE: STA. 1+00 to 6+25
6	C-102	INVERTED SIPHON CREEEK CROSSING - PLAN AND PROFILE: STA. 6+25 to 11+00
7	C-103	CALLE JOAQUIN GRAVITY SEWER - PLAN AND PROFILE: STA. 100+00 to 104+00
8	C-104	CALLE JOAQUIN GRAVITY SEWER - PLAN AND PROFILE: STA. 104+00 to 108+00
9	C-105	CALLE JOAQUIN GRAVITY SEWER - PLAN AND PROFILE: STA. 108+00 to 111+25
10	C-200	CALLE JOAQUIN LIFT STATION - DEMOLITION PLAN
11	C-201	CALLE JOAQUIN LIFT STATION - SITE AND GRADING PLAN
12	C-202	CALLE JOAQUIN LIFT STATION - UTILITY PLAN
13	C-203	CALLE JOAQUIN LIFT STATION AND APPROACH MANHOLE DETAILS
14	C-204	CALLE JOAQUIN LIFT STATION - SECTIONS AND DETAILS
15	C-205	CALLE JOAQUIN LIFT STATION - GRADING SECTIONS AND DETAILS
16	C-501	CIVIL DETAILS - 1
17	C-502	CIVIL DETAILS - 2
18	C-503	CIVIL DETAILS - 3
19	C-504	CIVIL DETAILS - 4
20	C-505	CIVIL DETAILS - 5
21	C-506	CIVIL DETAILS - 6
22	C-507	CIVIL DETAILS - 7
23	R-101	EXISTING TOPOGRAPHY PLAN
24	R-102	EXISTING TOPOGRAPHY PROFILE
25	R-103	GRADING PLAN - FINAL
26	R-104	GRADING PROFILE
27	R-105	GRADING CROSS SECTIONS - 1
28	R-106	GRADING CROSS SECTIONS - 2
29	R-107	GRADING CROSS SECTIONS - 3
30	R-108	DETAILS - ROOTWAD
31	L-101	PLANTING PLAN
32	L-102	INVASIVE SPECIES REMOVAL AND EROSION CONTROL PLAN
33	L-103	IRRIGATION PLAN
34	L-104	MISCELLANEOUS DETAILS
35	L-105	IRRIGATION DETAILS
36	L-106	EROSION CONTROL DETAILS
37	L-107	EROSION CONTROL DETAILS
38	S-101	PUMP STATION STRUCTURE AND WALL LAYOUT PLAN
39	S-102	WALL PROFILE AND DETAIL
40	S-103	WALL SECTIONS
41	S-104	CONCRETE SLAB PLAN
42	S-501	STRUCTURAL DETAILS - 1
43	S-502	STRUCTURAL DETAILS - 2
44	S-503	STRUCTURAL DETAILS - 3
45	S-504	SPECIAL INSPECTION
46	E-101	ELECTRICAL LEGEND AND ABBREVIATIONS
47	E-102	SINGLE LINE DIAGRAMS AND ELEVATION
48	E-103	CALLE JOAQUIN LIFT STATION - ELECTRICAL SITE PLAN
49	E-104	GROUNDING PLAN, PANEL AND CONDUIT SCHEDULES
50	E-105	CONTROL SCHEMATIC DIAGRAMS
51	E-106	ELECTRICAL DETAILS
52	E-107	ELECTRICAL DETAILS
53	N-001	INSTRUMENTATION LEGEND AND SYMBOLS
54	N-002	COMMUNICTION BLOCK DIAGRAM
55	N-003	CALLE JOAQUIN LIFT STATION P&ID
56	N-004	INSTRUMENTATION DETAILS

All work shall comply with the City Standard Specifications - May 2018 Edition and the City Engineering Standards - May 2018 Edition, except as amended in the specifications.

REGISTERED PROFESSIONAL ENGINEER DANIEL S. CROSSOT No. 73077 CIVIL STATE OF CALIFORNIA

811 Know what's below. Call before you dig.

AECOM
5001 E. Commercenter Drive, Suite 100
Bakersfield, California 93309
T 661.283.2323
www.aecom.com

san luis obispo county, california

CALLE JOAQUIN LIFT STATION REPLACEMENT

APPROVED BY

[MO DAY, YEAR]

Matthew A. Horn, City Engineer *R.C.E. C63611* *Approved Date*

SPECIFICATION NO.	DATE	SHEET
91133	DECEMBER 2020	1 of 56
	FILE NO./LOCATION G-001	

DWG: \\USBAKPRPP0001\Data\Work\City of San Luis Obispo\60502511 - calle joaquin lift station\900_cad\40-CD-plans\G-001.dwg USER: dalandsc3
DATE: Dec 07, 2020 3:46pm WEB: 60_1 - 24_2296 MAGS: SLO wastewater_lift_mapping_v3.tif 0767,-2294.tif

ACCESS NOTES:
1. ACCESS THE PROJECT SITE EAST OF US-101 FROM LOS OSOS VALLEY ROAD.
2. THE PROJECT SITE CANNOT BE DIRECTLY ACCESSED FROM US-101 OR RAMPS.

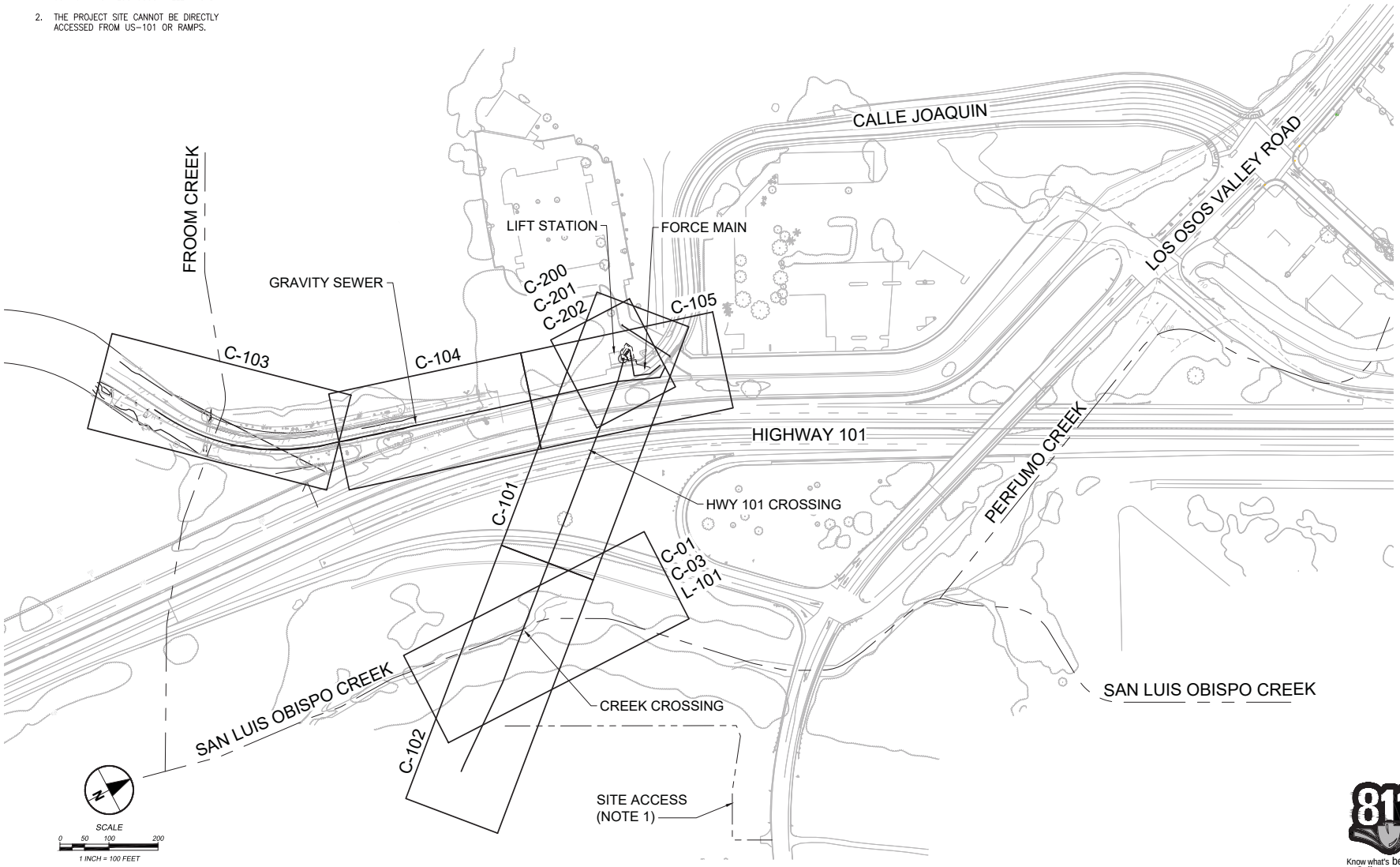

Know what's below. Call before you dig.

CITY OF SAN LUIS OBISPO

PROJECT TITLE: CALLE JOAQUIN LIFT STATION REPLACEMENT

SHEET TITLE: SHEET LAYOUT

REGISTERED PROFESSIONAL ENGINEER DANIEL S. CRONOVICH No. 73077 CIVIL STATE OF CALIFORNIA

DESIGNED BY:	DC
DRAWN BY:	NR
CHECKED BY:	-
APPROVED BY:	-
SCALE:	SEE DWG
DATE:	OCTOBER 2020
CITY SPECIFICATION NO.	91133
DRAWING NO.	G-002
SHEET NO.	2 of 56

DWG: \\USGSRV1FPSWGIS1\Work\sln_sf_wwr\sln_sf_wwr\60125711 - calle joaquin lift station\60125711 - calle joaquin lift station\02-design\01-G-002.dwg LYR: G-Sheet-01
DATE: Dec 07, 2020 3:49pm XREFS: REF-C-TP REF-C-SP REF-C-SP_XSR REF-C-RB_CALLE JOAQUIN 2020 REF-C-LP REF-C-SP_XSR IMAGES: SLO.jpg SLO emblem_bmp_med_pc.tif SLO.jpg

GENERAL NOTES

1. STRUCTURAL CONCRETE SHALL BE CLASS A PER SPECIFICATION SECTION 030500, UNLESS INDICATED OTHERWISE. SEE SPECIFICATION SECTION 90.
2. VERIFY DIMENSIONS AND CONDITIONS AT THE SITE BEFORE STARTING WORK. ANY CONFLICTS BETWEEN DETAILS OR DIMENSIONS ON THE DRAWINGS SHALL BE REPORTED PROMPTLY TO THE OWNER.
3. TAKE PRECAUTIONARY MEASURES TO PROTECT UTILITIES AND STRUCTURES SHOWN AS WELL AS ANY AND ALL OTHERS NOT ON RECORD DRAWINGS OR NOT SHOWN ON THESE PLANS. ALL SUCH IMPROVEMENTS OR STRUCTURES DAMAGED BY THE CONTRACTOR'S OPERATIONS SHALL BE REPAIRED OR RECONSTRUCTED TO ORIGINAL DESIGN CONDITION AND/OR THE APPLICABLE REQUIREMENTS OF THE AFFECTED UTILITY AT THE CONTRACTOR'S EXPENSE. APPROVAL BY CITY SHALL ALSO BE REQUIRED.
4. COORDINATE UNDERGROUND UTILITY MARKING WITH THE LOCAL UNDERGROUND SERVICE ALERT JURISDICTION (CALL 811) PRIOR TO CONSTRUCTION.
5. USE EXTREME CAUTION WHEN WORKING NEAR OVERHEAD OR UNDERGROUND POWER, GAS, OR OTHER UTILITIES SO AS TO SAFELY PROTECT ALL PERSONNEL AND EQUIPMENT. PROTECT FROM DAMAGE INCURRED DURING CONSTRUCTION ALL OVERHEAD UTILITY LINES WHETHER SHOWN OR NOT SHOWN ON THESE PLANS. NOTIFY UTILITY COMPANIES PRIOR TO ANY WORK IN OVERHEAD LOCATIONS. CONTRACTOR SHALL BE RESPONSIBLE FOR COST INCURRED.
6. PRESERVE ALL SURVEY MARKERS AND MONUMENTATION. THOSE REQUIRING REMOVAL SHALL BE RE-ESTABLISHED IN ACCORDANCE WITH THE LOCAL GOVERNING AUTHORITY BY THE CONTRACTOR.
7. MAINTAIN SITE SECURITY AND OWNER ACCESS THROUGHOUT CONSTRUCTION.
8. COMPACTION OF BACKFILL MATERIALS SHALL BE BY MECHANICAL EQUIPMENT IN ACCORDANCE WITH SPECIFICATIONS. NO FLOODING OR JETTING WILL BE ALLOWED.
9. CONTRACTOR SHALL POTHOLE AND VERIFY LOCATIONS AND DEPTHS OF ALL EXISTING UTILITIES BEFORE BEGINNING CONSTRUCTION. LOCATIONS SHOWN ON THESE PLANS ARE APPROXIMATE AND FOR GENERAL INFORMATION ONLY. CONTRACTOR SHALL POTHOLE PER SPECIFICATION SECTION 023219.
10. ALL SPECIFICATIONS, DRAWINGS, AND DETAILS INCLUDED IN THE CONTRACT DOCUMENTS SHALL FULLY APPLY TO THE WORK WHETHER SPECIFICALLY REFERENCED OR NOT.
11. PROVIDE VIDEO TO DOCUMENT THE PRE-EXISTING CONDITIONS OF THE PROJECT SITE AND SURROUNDING AREA. SUBMIT THE VIDEO TO THE CITY PRIOR TO THE START OF CONSTRUCTION.
12. UPON LEARNING OF THE EXISTENCE AND LOCATIONS OF ANY UNDERGROUND FACILITIES NOT SHOWN OR SHOWN INACCURATELY ON THESE PLANS OR NOT PROPERLY MARKED BY THE UTILITY OWNER, IMMEDIATELY NOTIFY THE OWNER.
13. MAINTAIN THE WORK AREA IN A NEAT, CLEAN, AND SANITARY CONDITION AT ALL TIMES AND TO THE SATISFACTION OF THE OWNER. STREETS SHALL BE KEPT CLEAN OF DEBRIS, WITH DUST AND OTHER NUISANCES BEING CONTROLLED AT ALL TIMES.
14. MAINTAIN A COMPLETE AND ACCURATE RECORD OF ALL CHANGES IN CONSTRUCTION FROM THAT SHOWN IN THESE PLANS AND SPECIFICATIONS FOR THE PURPOSE OF PROVIDING A BASIS FOR RECORD DRAWINGS. THE CONTRACTOR SHALL NOTE DEVIATIONS FROM THE PLANS ON A SET OF PLANS SPECIFICALLY SET ASIDE FOR THIS PURPOSE. ANY CHANGES SHALL BE MADE ON THE ORIGINALS OF THE PLANS. NO CHANGES FROM THAT SHOWN ON THESE PLANS AND SPECIFICATIONS SHALL BE MADE WITHOUT PRIOR WRITTEN APPROVAL OF THE OWNER'S REPRESENTATIVE.
15. RESTORE ALL TRAFFIC LOOPS, STRIPING, MARKERS, SIGNS, PAVEMENT, CONCRETE, ASPHALT, GRAVEL AND DRIVEWAY SURFACES REMOVED OR DAMAGED DURING CONSTRUCTION UNLESS INDICATED OTHERWISE ON THE PLANS. PAVEMENT RESTORATION ABOVE PIPELINE TRENCHES SHALL BE PER TRENCH DETAIL. OTHER SURFACES SHALL BE RESTORED IN-KIND UNLESS INDICATED OTHERWISE.
16. PREVENT CONSTRUCTION TRAFFIC FROM TRACKING SEDIMENT AND DEBRIS ON TO PRIVATE, CITY, COUNTY, AND STATE ROADS OR RIGHT-OF-WAY.
17. CONSTRUCTION ACTIVITIES SHALL BE LIMITED TO THE HOURS REFERENCED IN THE CONTRACT DOCUMENTS AND AS LIMITED BY LOCAL ORDINANCE.
18. ALL FACILITIES SHALL BE CONSTRUCTED IN ACCORDANCE WITH THE CITY OF SAN LUIS OBISPO *ENGINEERING STANDARDS AND STANDARD SPECIFICATIONS DATED MAY 31 2018*, APPLICABLE CODES AND REGULATIONS, AND THE SPECIFICATIONS ISSUED WITH THIS PLANSET, UNLESS OTHERWISE INDICATED IN THE CONSTRUCTION DOCUMENTS.
19. PROJECT SPECIFIC GEOTECHNICAL INFORMATION IS CONTAINED IN THE APPENDIX TO THE SPECIFICATIONS.
20. FURNISH AND MAINTAIN CHEMICAL TOILETS FOR USE BY WORKERS AND SUBCONTRACTORS.
21. LABELED RIM ELEVATIONS ARE APPROXIMATE. ADJUST CLEANOUTS LIDS AND COVER TO MATCH GRADE.
22. SERVICE LATERALS (I.E. SEWER, WATER, GAS, ELECTRIC, COMMUNICATIONS) ARE NOT ALL SHOWN ON THE PLANS. LOCATE AND PROTECT ALL SERVICE LATERALS PER SPECIFICATION SECTIONS 020120 AND 023219. REPLACE OR REPAIR SERVICE LATERALS DAMAGED BY CONSTRUCTION.
23. THE CONTRACTOR SHALL COMPLY WITH THE REQUIREMENTS OF THE CALIFORNIA STATE WATER RESOURCES CONTROL BOARD CONSTRUCTION ACTIVITIES STORM WATER GENERAL PERMIT NO. 2009-0009-DWQ (AS AMENDED BY 2010-0014-DWQ AND 2012-0006-DWQ), NPDES NO. CAS000002, FOR DISCHARGES OF STORM WATER ASSOCIATED WITH CONSTRUCTION ACTIVITIES. THE CONTRACTORS ATTENTION IS DIRECTED TO THE SPECIFICATIONS FOR ADDITIONAL INFORMATION AND DETAILED REQUIREMENTS.
24. THE CONTRACTOR SHALL CONTROL LIVE SEWER FLOW TO ENABLE CONSTRUCTION OF NEW SEWER PER SPECIFICATION SECTION 015800.
25. THE CONTRACTOR IS RESPONSIBLE FOR ALL DEWATERING ACTIVITIES REQUIRED TO CONSTRUCT THE FACILITIES INCLUDING DISPOSAL PER SPECIFICATION SECTION 312319.
26. GROUND WATER PUMPED FROM EXCAVATIONS MAY BE DISCHARGED IN ACCORDANCE WITH APPLICABLE PERMITS AND REGULATIONS. GROUND WATER SHALL NOT BE DISCHARGED TO THE STREET OR SURROUNDING AREA WITHOUT A PERMIT. NO DISCHARGE TO SANITARY SEWER WILL BE ALLOWED UNLESS PRIOR WRITTEN PERMISSION IS GRANTED BY THE CITY.
27. ALL UNITS SHOWN ARE IN FEET, UNLESS OTHERWISE SPECIFIED.
28. WHERE THE SEWER FORCE MAIN CROSSES A WATERLINE, CROSSING SHALL MEET THE REQUIREMENTS OF ENGINEERING STANDARDS 6100 AND 6140.
29. SOLID SHEETING AND SHORING IS REQUIRED FOR ALL EXCAVATIONS. CONTRACTOR TO VERIFY LOCATION OF EXISTING UTILITIES.

TRAFFIC CONTROL NOTES

1. ALL TRAFFIC CONTROL WORK FOR CONSTRUCTION SHALL CONFORM TO THE LATEST EDITION OF THE CALIFORNIA MANUAL ON UNIFORM TRAFFIC CONTROL DEVICES (CA-MUTCD) AND ALL OCCUPATIONAL SAFETY AND HEALTH ADMINISTRATION (O.S.H.A.) REQUIREMENTS AS APPLICABLE.
2. SUBMIT TO THE ENGINEER A TRAFFIC CONTROL PLAN FOR REVIEW AND APPROVAL PRIOR TO STARTING ANY CONSTRUCTION ACTIVITIES AND PRIOR TO ISSUANCE OF AN ENCROACHMENT PERMIT. SUBMIT SEPARATE TRAFFIC CONTROL PLANS FOR EACH PHASE OF THE WORK REQUIRING A CHANGE IN TRAFFIC CONTROL. ALLOW A MINIMUM OF FOURTEEN WORKING DAYS FOR REVIEW OF THE SUBMITTED TRAFFIC CONTROL PLAN AND FOURTEEN WORKING DAYS FOR REVIEW OF ANY RESUBMITTED PLANS.
3. NO WORK SHALL COMMENCE UNTIL ALL CONSTRUCTION SIGNAGE IS IN PLACE.
4. CONTRACTOR SHALL POST PARKING RESTRICTIONS 30 HOURS BEFORE ANY WORK STARTS.
5. WORKING HOURS: PER THE CITY'S ENCROACHMENT PERMIT OR AS SPECIFIED IN THE PROJECT SPECIFICATIONS.
6. CONTRACTOR SHALL PROVIDE TEMPORARY PAVING AND STEEL PLATES TO COVER EXCAVATED AREAS PER THE PROJECT SPECIFICATIONS.
7. CONTRACTOR SHALL COVER EXISTING SIGNS THAT CONFLICT WITH TEMPORARY TRAFFIC CONTROL AND REMOVE COVERS WHEN TEMPORARY TRAFFIC CONTROL IS REMOVED. ALL TEMPORARY TRAFFIC CONTROL DEVICES SHALL BE REMOVED FROM THE STREET WHEN NOT IN USE OR UPON COMPLETION OF ASSOCIATED WORK.
8. PROVIDE ADEQUATE WIDTH TO ALLOW A BIKE LANE ADJACENT TO THE TRAVEL LANE OR PROVIDE CLEAR POSTING THAT THE BICYCLE LANE IS CLOSED.
9. CONTRACTOR SHALL NOT PLACE TRAFFIC CONTROL DEVICES OR CONSTRUCTION EQUIPMENT IN BIKE LANES OR IN SIDEWALKS SUCH THAT THEY ARE BLOCKED, AS DETERMINED BY THE ENGINEER, WHEN THESE FACILITIES ARE OPEN FOR USE.
10. CONTRACTOR SHALL NOTIFY ALL BUSINESSES OR RESIDENCES IN THE AREA AFFECTED BY CONSTRUCTION AND SHALL PROVIDE ADEQUATE ACCESS TO AND FROM SUBJECT PROPERTIES DURING CONSTRUCTION.
11. ANY WORK THAT DISTURBS NORMAL TRAFFIC SIGNAL OPERATIONS SHALL BE COORDINATED WITH THE PUBLIC WORKS DEPARTMENT AT LEAST THREE (3) BUSINESS DAYS PRIOR TO BEGINNING THE WORK. FOR ANY WORK REQUIRING NIGHT PERMITS OBTAIN ALL NECESSARY APPROVALS AND COMPLY WITH REQUIREMENTS SHOWN IN SECTION 12 OF THE CITY'S 2018 ENGINEERING STANDARDS. CONTRACTOR SHALL REPLACE DAMAGED SIGNAL DETECTORS AT THEIR OWN EXPENSE.
12. CONTRACTOR SHALL ABIDE BY ANY AND ALL TRAFFIC RELATED CONDITIONS AS STATED IN THE AGREEMENT SET WITH MOTEL 6, WHICH CAN BE FOUND IN APPENDIX XX.
13. CALLE JOAQUIN TO BE OPEN TO TRAFFIC AT ALL TIMES DURING WEEK DAYS AND BUSINESS HOURS IT CAN BE ONE LANE FLAGGED. WEEKENDS AND NIGHTS IT WILL BE REQUIRED TO MAINTAIN TWO WAY TRAFFIC FLOWS.

UTILITY	CONTACT	PHONE NUMBER
AT&T	NEIL ZAKARIA	(805) 546-7012
PG&E	TOM WAHWEOTTEN	(805) 546-5272
SOUTHERN CALIFORNIA GAS COMPANY	CLAUDIA TURNER	(805) 681-8024
CHARTER	ERIC EDEEN	(805) 783-4950
VERIZON	SANDRA O'KEEFE	(805) 925-0057
CONOCO PHILIPS (TOSCO)	BILL ORR	(805) 925-5795
UNDERGROUND SERVICE ALERT		811

811
Know what's below.
Call before you dig.

LEGEND

RIGHT-OF-WAY LINE
EXISTING EASEMENT LINE
TEMPORARY CONSTRUCTION EASEMENT LINE
NEW EASEMENT LINE
PL — APPROXIMATE PROPERTY LINE
EDGE OF PAVEMENT
EXISTING CONCRETE CURB
EXISTING FENCE
NEW FENCE
SD — STORM DRAIN LINE
OH — OVERHEAD UTILITY LINE
G3 — 3 INCH UNDERGROUND NATURAL GAS LINE
IRR — IRRIGATION PIPE
OIL — OIL PIPE LINE
E — UNDERGROUND ELECTRICAL LINE
WM10 — 10 INCH UNDERGROUND WATER LINE
AR1 — 1 INCH UNDERGROUND AIR LINE
RW — RECYCLED WATER LINE
NEW PIPELINE CENTERLINE
EXISTING GROUND SURFACE (PROFILE VIEW)
SS12 — ABANDONED SANITARY SEWER LINE

SURVEY CONTROL POINT AND NUMBER
FOUND MONUMENT AS DESCRIBED (SEE MONUMENT TABLE)
G — UNDERGROUND GAS PAINT MARK
SS — SANITARY SEWER PAINT MARK
W — WATER PAINT MARK
T — UNDERGROUND TELEPHONE PAINT MARK
E — UNDERGROUND ELECTRIC PAINT MARK
FO — UNDERGROUND FIBER OPTIC PAINT MARK
20" PINE — TREE WITH DIAMETER NOTED
WV — WATER VALVE
AVV — AIR/VACUUM VALVE
V — VALVE
FIRE HYDRANT
GUY POLE
GUY WIRE
TP — TELEPHONE POLE
JP — JOINT UTILITY POLE
PP — POWER POLE
PP — POLE WITH LIGHT
EM — ELECTRIC METER
GM — GAS METER
TSB — TRAFFIC SIGNAL BOX
WM — WATER METER
GV — GAS VALVE
ICV — IRRIGATION CONTROL VALVE
AREA LIGHT
LIGHT STANDARD
Ⓒ COMMUNICATION MANHOLE
Ⓔ ELECTRICAL MANHOLE
B-1 — SOIL BORING LOCATION & NUMBER PER PROJECT GEOTECHNICAL REPORT
C-1 — SOIL CPT LOCATION & NUMBER PER PROJECT GEOTECHNICAL REPORT

Ⓖ GAS MANHOLE
Ⓓ STORM DRAIN MANHOLE
Ⓢ SANITARY SEWER MANHOLE
ELEC — ELECTRICAL BOX
GAS — GAS BOX
SLB — STREET LIGHT BOX
TEL — TELEPHONE BOX
BOLLARD/SMALL POLE
MW — MONITORING WELL
CO — SANITARY SEWER CLEAN OUT
STREET SIGN/SIGN POST
FO — FIBER OPTIC PLACARD
G — GAS PLACARD
MAIL BOX
BRUSH LINE/DRIP LINE
1 — POTHOLE NUMBER/LOCATION
NEW SAMPLING STATION
NEW CAV
NEW BLOWOFF VALVE
NEW PLUG VALVE
NEW ARV
NEW AVV
THRUST BLOCK
END OF LINE OR CURVE
START OF LINE OR CURVE

ABBREVIATIONS

AC	ASPHALT CONCRETE	PC	POINT ON CURVE
ARV	AIR RELEASE VALVE	PCC	PORTLAND CONCRETE PAVEMENT
AVV	AIR VACUUM VALVE	PE	PLAIN END
℄	CENTERLINE	PE	POLYETHYLENE
CAV	COMBINATION AIR VALVE	PH	POTHOLE
DIA.	DIAMETER	PI	POINT OF INFLECTION
DI	DUCTILE IRON	PL	PROPERTY LINE
DIP	DUCTILE IRON PIPE	PO	PUSH-ON JOINT
EC	END OF CURVE	PP	POWER POLE
EG	EXISTING GRADE	PRV	PRESSURE RELEASE VALVE
EL	ELEVATION	PVC	POLYVINYL CHLORIDE
EXIST.	EXISTING	RCB	REINFORCED CONCRETE BOX
FCTF	FIELD CUT TO FIT	R/W	RIGHT-OF-WAY
FG	FIBERGLASS	(ROW)	RIGHT-OF-WAY
FLG	FLANGE	RW	RECYCLED WATER
FL	FLOW LINE	S	SLOPE
FM	FORCE MAIN	SCH	SCHEDULE
FO	FIBER OPTIC	SD	STORM DRAIN
FRP	FIBERGLASS REINFORCE PLASTIC	SS	SANITARY SEWER
GE	GROOVED END	SSMH	SANITARY SEWER MANHOLE
GRS	GALVANIZED RIGID STEEL	STA	STATION
GRVD	GROOVED	STL	STEEL
HDPE	HIGH DENSITY POLYETHYLENE	TC	TOP OF CURB
INV	INVERT	TCE	TEMPORARY CONSTRUCTION EASEMENT
MJ	MECHANICAL JOINT	TOF	TOP OF FOOTING
O.C.	ON CENTER	TOW	TOP OF WALL
O.D.	OUTSIDE DIAMETER	TOS	TOP OF SLAB
OH	OVERHEAD	TS	TRAFFIC SIGNAL
PD	PLANT DRAIN	WM	WATER MAIN

CITY OF SAN LUIS OBISPO

PROJECT TITLE: CALLE JOAQUIN LIFT STATION REPLACEMENT

SHEET TITLE: LEGEND, ABBREVIATIONS AND NOTES

REGISTERED PROFESSIONAL ENGINEER DANIEL S. CRONQUIST No. 73077 CIVIL STATE OF CALIFORNIA

DESIGNED BY: DC
DRAWN BY: NR
CHECKED BY: -
APPROVED BY: -
SCALE: SEE DWG
DATE: OCTOBER 2020
CITY SPECIFICATION NO. 91133
DRAWING NO. G-003
SHEET NO. 3 of 56

DWG: \\USBKF1PFPSW001\Data\Work\city of san luis obispo\60225711 - calle joaquin lift station\900_cad_gis\02-sheets\SHT-G-003.dwg USER: GhilarducciD
DATE: Dec 07, 2020 3:49pm XREFS: REF-G-BD_CALLE JOAQUIN 2020 IMAGES: SLO emblem_bmp_med_pc.tif

FOR REDUCED PLANS
ORIGINAL SCALE IS IN INCHES 0 1 2 3

SHEET LAYOUT AND SURVEY CONTROL

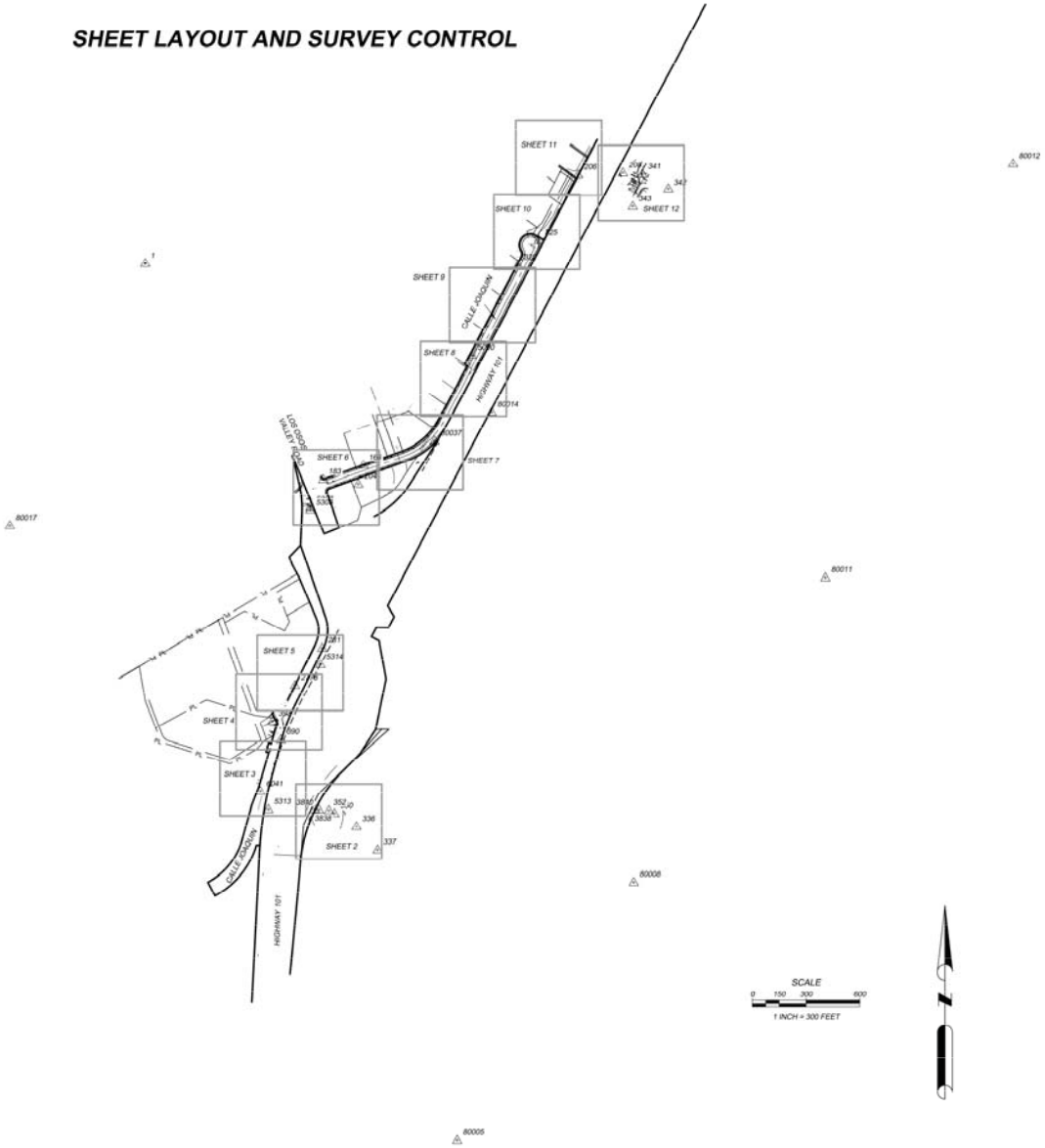

SCALE
0 150 300 600
1 INCH = 300 FEET

SURVEY CONTROL POINTS				
PT. NO.	NORTHING	EASTING	ELEV.	DESC.
1	2288063.27	5719688.08	119.21	S RDR
166	2286933.18	5760906.37	110.96	SCRIBE X
183	2286852.76	5760681.78	108.51	SCRIBE X
202	2286829.86	5760705.48	108.18	FD BC
204	2286827.86	5760877.56	110.81	PK
205	2287223.55	5761351.62	115.27	FD X
206	2288556.74	5762104.89	122.13	5RBR WG CAP
208	2288567.69	5762354.78	123.63	SPIKE FEATHER
322	2288054.53	5761768.86	119.10	SCRIBE X
325	2288190.85	5761886.27	119.75	SCRIBE X
326	2288153.33	5761863.23	119.49	FD MON WELL STRADDLERS
327	2288166.41	5761838.41	119.80	FD MON WELL STRADDLERS
336	2284911.99	5760867.38	101.71	5RBR WG CAP
337	2284782.48	5760985.33	102.46	5RBR WG CAP
350	2284983.89	5760744.84	92.25	1X1 WOOD
352	2285001.55	5760713.75	93.24	1IN WILLOW
390	2285401.53	5760445.30	104.06	CS TIN
392	2285397.62	5760438.65	103.63	FD BCLS8206
393	2285505.56	5760398.83	105.68	SCRIBE X
1200	2287172.98	5761351.97	114.95	FD BC
1203	2287139.04	5761295.20	115.13	FD N&TLS6747
1229	2287010.85	5761122.10	113.33	5RBRLS6192
1230	2286996.88	5761083.10	114.10	5RBRLS6192
2524	2288074.42	5761774.75	119.19	TAG6492
2778	2285704.25	5760524.54	105.67	PKNAILGREENPAINT
2811	2285911.91	5760675.47	108.93	NAIL&TEL108.91
3838	2285005.50	5760658.51	93.05	1X2 WOOD
3840	2285007.49	5760633.00	94.37	1X2 WOOD
5000	2287552.12	5761511.48	116.81	SPIKE 600 EXPJNT
5001	2287474.11	5761510.60	115.63	FD BC
5307	2286697.68	5760609.67	109.76	SCRIBE X
5308	2286683.51	5760609.21	109.61	5RBR WG CAP
5313	2285007.25	5760375.20	103.92	5RBR WG CAP
5314	2285821.04	5760666.46	105.57	5RBR WG CAP
5315	2285608.57	5760481.37	105.02	BM 8009 S-39
5318	2286867.26	5760660.72	109.06	FD L+N BM 39
6041	2285109.95	5760330.83	104.01	CS PINK
8011	2286766.68	5760562.14	108.11	FD BC LS8206
80005	2283157.08	5761429.92	94.94	FX
80008	2284601.65	5762415.50	121.90	CONTROL
80011	2286305.45	5763485.52	123.31	FX
80012	2288619.13	5764533.60	132.01	FX
80014	2287230.86	5761622.30	117.64	FX
80017	2286595.71	5758932.15	213.78	FX
80037	2287066.80	5761303.03	114.88	CS

SURVEYOR'S STATEMENT

THIS MAP REPRESENTS A SURVEY MADE BY ME OR UNDER MY DIRECTION, NOVEMBER 21, 22, & 23, DECEMBER 7 & 8, 2011 AND JANUARY 4, 6, & 13, 2012 AT THE REQUEST OF AECOM.

DATE: JANUARY 19, 2012
REVISION FEBUARY 8, 2012

JOSEPH T. MORRIS, LS 6192
(LICENSE EXPIRES 3/31/2012)

LICENSED LAND SURVEYOR JOSEPH T. MORRIS No. 6192 Exp.3/31/12 STATE OF CALIFORNIA

SURVEY NOTES

1. THE HORIZONTAL DATUM FOR THIS SURVEY TIED TO 6 AERIAL CONTROL POINTS FROM AERIAL PROVIDED BY THE CITY OF SAN LUIS OBISPO FOR THE 101/LOS OSOS VALLEY ROAD INTERCHANGE PROJECT. THE DATE OF THE AERIAL IS APPROXIMATELY 12/05 TP 1/06. HORIZONTAL COORDINATES ARE LISTED FROM POINTS 80005, 80008, 80011, 80012, 80014, AND 80017.
2. THESE POINTS WERE CONSTRAINED HORIZONTALLY AND VERTICALLY.
3. THE CONTOUR INTERVAL IS 1 FOOT.
4. UNDERGROUND UTILITY LOCATIONS ARE PLOTTED BASED ON ABOVE GROUND PAINT MARKS BY OTHERS, ABOVE GROUND SURFACE STRUCTURES. ACTUAL LOCATION MAY DIFFER. ADDITIONAL UNDERGROUND UTILITY LINES MAY EXIST. FOR INFORMATION REGARDING UTILITY LOCATION, SIZE, DEPTH, CONDITION, AND CAPACITY CONTACT UTILITY OR MUNICIPAL/PUBLIC SERVICE FACILITY.
5. UNDERGROUND PIPE SIZES ARE BASED ON VISUAL OBSERVATIONS MADE FROM THE SURFACE AND ARE APPROXIMATE.
6. EASEMENTS AFFECTING THE PROPERTY SHOWN HEREON HAVE BEEN PLOTTED BASED UPON PROVIDED TITLE INFORMATION.

811 Know what's below. Call before you dig.

PROJECT NO. 532-026		
SURVEYED BY: MM/JM/GM	12/2011&1/2012	
DRAFTED BY: MM/GM	1/2012	
CHECKED BY: JM	1/2012	

WALLACE GROUP
CIVIL ENGINEERING
CONSTRUCTION MANAGEMENT
LANDSCAPE ARCHITECTURE
MECHANICAL ENGINEERING
PLANNING
PUBLIC WORKS ADMINISTRATION
SURVEYING / GIS SOLUTIONS
WATER RESOURCES
WALLACE SWANSON INTERNATIONAL
612 CLARION COURT
SAN LUIS OBISPO, CA 93401
T 805 544-4011 F 805 544-4294
www.wallacegroup.us

These plans and specifications, and the ideas and designs incorporated herein, are the property of Wallace Group, A Corporation, and shall not be used in whole or in part for any other project without written authority of Wallace Group, a California Corporation.
Copyright © 2009 Wallace Group, A California Corporation. All rights reserved.
Copies of this drawing shall have this notice.

REV	DATE	BY	DESCRIPTION OF REVISION
1	02/08/12	MM	ADDED CONTOURS OVER EXIST SS IN CREEK AND ON 1ST ON SHEETS 1-4

TOPOGRAPHIC SURVEY OF PORTIONS OF LAND IN THE CITY OF SAN LUIS OBISPO AND A PORTION OF LAND IN THE COUNTY OF SAN LUIS OBISPO, CA

SHEET 1 OF 12 SHEETS

CITY OF SAN LUIS OBISPO

PROJECT TITLE: CALLE JOAQUIN LIFT STATION REPLACEMENT

SHEET TITLE: SURVEY CONTROL DATA

REGISTERED PROFESSIONAL ENGINEER DANIEL S. CROQUILLE No. 73077 CIVIL STATE OF CALIFORNIA

DESIGNED BY:	DC
DRAWN BY:	NR
CHECKED BY:	-
APPROVED BY:	-
SCALE:	SEE DWG
DATE:	OCTOBER 2020
CITY SPECIFICATION NO.	91133
DRAWING NO.	G-004
SHEET NO.	4 of 56

CAD OPERATOR: MARKM DATE: March 28, 2012 DRAWING FILE NAME: 532-26 CALLE JOAQUIN LS.DWG LAYOUT NAME: SHEET 1

DWG: \\LOSINT\PROJWO01\data\Work\city of san luis obispo\60225711 - calle joaquin lift station\900_cad_gis\02-sheets\SHT-C-004.dwg USER: GNordscoCD
DATE: Dec 07, 2020 3:46pm XREFS: REF-C-TP REF-C-BS, CALLE JOAQUIN 2020 IMAGES: SLO emblem_bmp_mod_sc.jpg

GENERAL NOTES:

SEE SHEET G-003 FOR GENERAL NOTES

CONSTRUCTION NOTES:

1. FURNISH AND INSTALL NEW 6' DIAMETER SEWER MANHOLE PER ENGINEERING STD 6610. COAT INTERIOR OF MANHOLE PER SPECIFICATION SECTION 099720, AND COAT OUTSIDE PER SPECIFICATION SECTION 034210.
2. ABANDON EXISTING SEWER PER ENGINEERING STD 6050 AFTER COMPLETION OF NEW WORK.
3. OMITTED
4. FURNISH AND INSTALL NEW 6' DIAMETER APPROACH MANHOLE PER DETAIL 1/C-505. COAT INTERIOR OF MANHOLE PER SPECIFICATION SECTION 099720, AND COAT OUTSIDE PER SPECIFICATION SECTION 034210.
5. 12"ø HDPE, DR17 (AWWA C906) AND 4"ø CONDUIT IN 30"ø STEEL CASING PER DETAIL 3/C-502
6. OMITTED
7. CONCRETE ENCASED DOUBLE BARREL SIPHON AND CONDUIT PER DETAIL 5/C-501. BACKFILL IN ACCORDANCE WITH SPECIFICATION SECTION 312316.
8. CONSTRUCT NEW LIFT STATION AND WET WELL PER DETAIL A/C-203
9. CONTRACTOR TO VERIFY LOCATION AND DEPTH OF EXISTING CALTRANS PILES.
10. CONTRACTOR TO REMOVE EXISTING 12-INCH PIPELINE.
11. OMITTED
12. CONTRACTOR TO USE TRENCHLESS INSTALLATION NEAR HIGHWAY.
13. PIPE CASINGS BETWEEN STATIONS 1+42 AND 1+90.32 SHALL REMAIN IN PLACE; HOWEVER, CASINGS THAT INTERFERES WITH CONSTRUCTION OF THE MANHOLES AT STATIONS 1+74.28 AND 1+92.83 SHALL BE REMOVED.
14. UNDERGROUND UTILITY LOCATIONS ARE PLOTTED BASED ON ABOVE GROUND PAINT MARKS BY OTHERS, ABOVE GROUND SURFACE STRUCTURES. ACTUAL LOCATION MAY DIFFER. ADDITIONAL UNDERGROUND UTILITY LINES MAY EXIST. FOR INFORMATION REGARDING UTILITY LOCATION, SIZE, DEPTH, CONDITION, AND CAPACITY CONTACT UTILITY OR MUNICIPAL/PUBLIC SERVICE FACILITY.
15. UNDERGROUND PIPE SIZES ARE BASED ON VISUAL OBSERVATIONS MADE FROM THE SURFACE AND ARE APPROXIMATE.
16. EASEMENTS AFFECTING THE PROPERTY SHOWN HEREON HAVE BEEN PLOTTED BASED UPON PROVIDED TITLE INFORMATION.
17. TRACER WIRE TO BE INSTALLED INCLUDING A CAP ON EITHER END WITH A NYLON PULL ROPE.

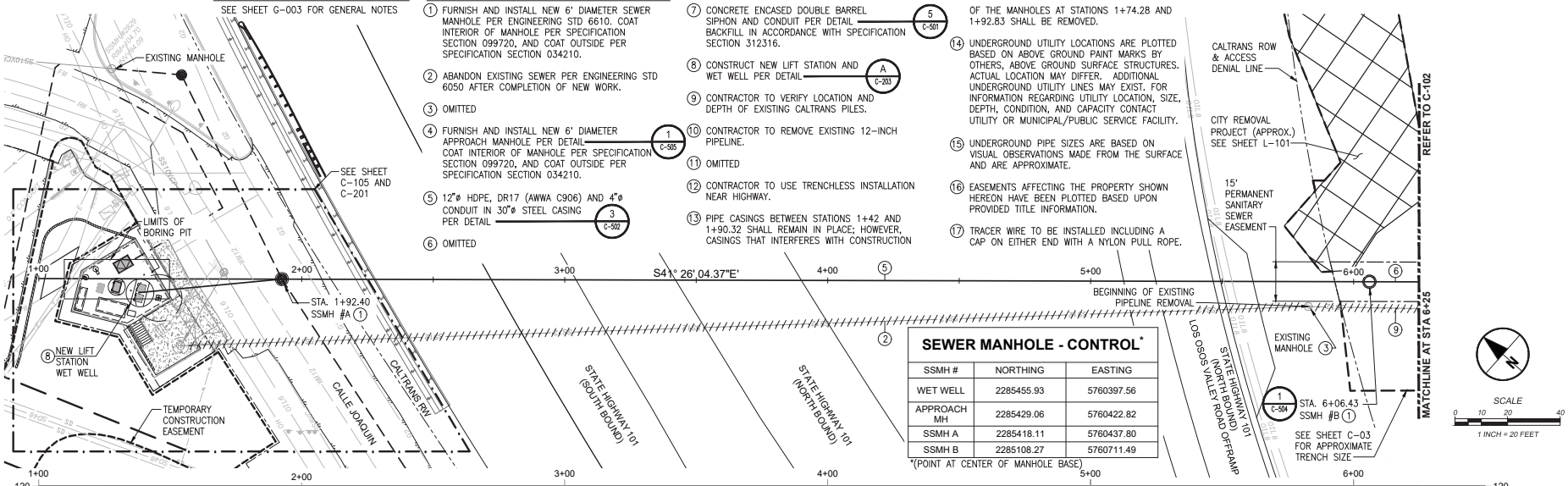

SEWER MANHOLE - CONTROL*

SSMH #	NORTHING	EASTING
WET WELL	2285455.93	5760397.56
APPROACH MH	2285429.06	5760422.82
SSMH A	2285418.11	5760437.80
SSMH B	2285108.27	5760711.49

*(POINT AT CENTER OF MANHOLE BASE)

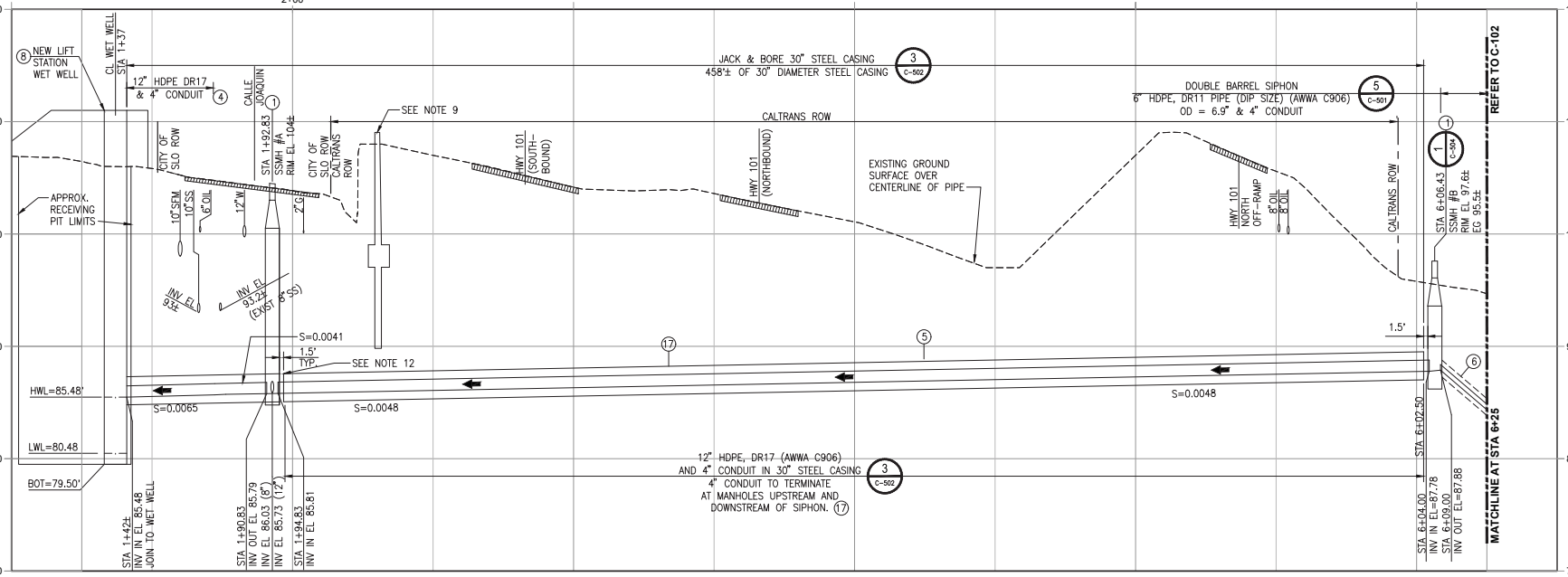

Know what's below. Call before you dig.

CITY OF SAN LUIS OBISPO

PROJECT TITLE: CALLE JOAQUIN LIFT STATION REPLACEMENT

SHEET TITLE: HIGHWAY 101 CROSSING - PLAN AND PROFILE: STA. 1+00 TO 6+25

REGISTERED PROFESSIONAL ENGINEER DANIEL S. CROUSHORE No. 73077 CIVIL STATE OF CALIFORNIA

DESIGNED BY:	DC
DRAWN BY:	NR
CHECKED BY:	
APPROVED BY:	
SCALE:	SEE DWG
DATE:	OCTOBER 2020
CITY SPECIFICATION NO.	91133
DRAWING NO.	C-101
SHEET NO.	5 of 56

DWG: \\USER\FIPPSPWO1\Jobs\Work\city of san luis obispo\60225711 - calle joaquin lift station\900_cad_gis\02-sheets\SHT-C-101.dwg USER: GHijerda<CD
DATE: Dec 07, 2020 3:49pm XREFS: REF-C-TP REF-C-SP REF-C-UP REF-C-LP REF-C-PIPE REF-C-BD REF-C-SP-101 IMAGES: SLO_emblem_temp_med_gc.tif

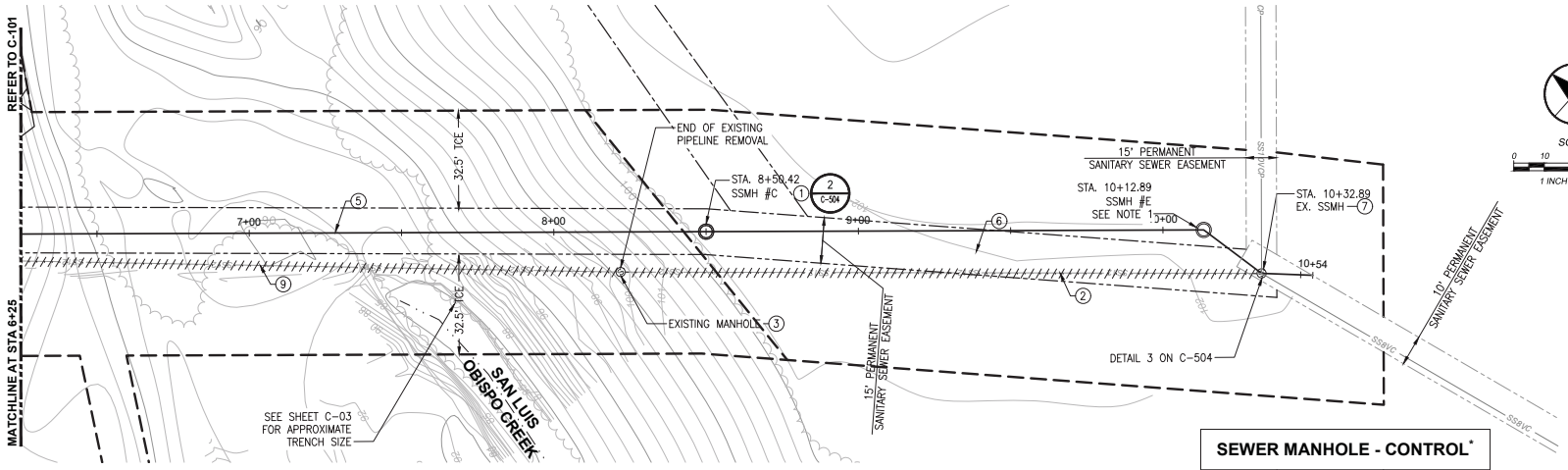

SEWER MANHOLE - CONTROL*

SSMH #	NORTHING	EASTING
SSMH C	2284925.10	5760872.96

*(POINT AT CENTER OF MANHOLE BASE)

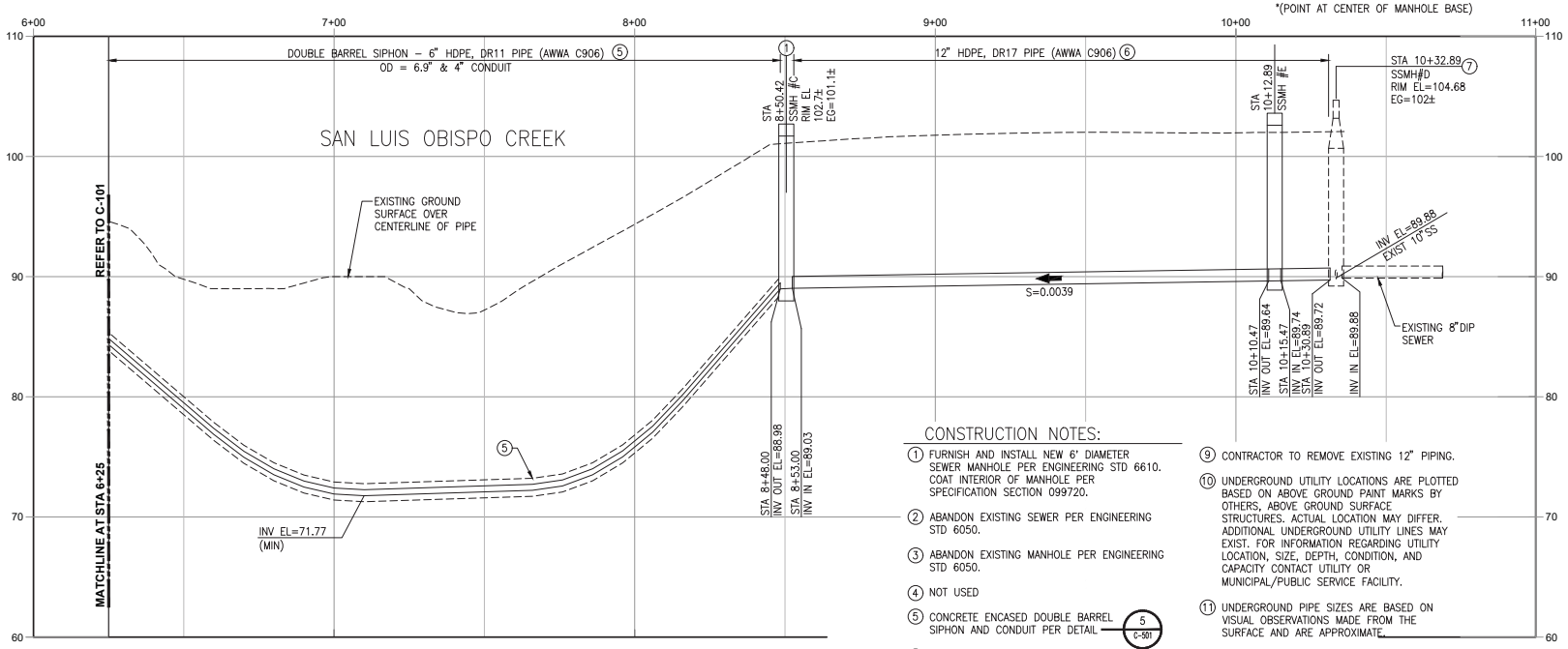

CONSTRUCTION NOTES:

1. FURNISH AND INSTALL NEW 6' DIAMETER SEWER MANHOLE PER ENGINEERING STD 6610. COAT INTERIOR OF MANHOLE PER SPECIFICATION SECTION 099720.
2. ABANDON EXISTING SEWER PER ENGINEERING STD 6050.
3. ABANDON EXISTING MANHOLE PER ENGINEERING STD 6050.
4. NOT USED
5. CONCRETE ENCASED DOUBLE BARREL SIPHON AND CONDUIT PER DETAIL 5 / C-501
6. 12"ø DR 17 HDPE SEWER PIPE PER SECTION 402097 AND ENGINEERING STD 6030
7. CONNECT TO EXISTING SEWER MANHOLE PER DETAIL 3 / C-504 BACKFILL IN ACCORDANCE WITH SPECIFICATION SECTION 312316
9. CONTRACTOR TO REMOVE EXISTING 12" PIPING.
10. UNDERGROUND UTILITY LOCATIONS ARE PLOTTED BASED ON ABOVE GROUND PAINT MARKS BY OTHERS, ABOVE GROUND SURFACE STRUCTURES. ACTUAL LOCATION MAY DIFFER. ADDITIONAL UNDERGROUND UTILITY LINES MAY EXIST. FOR INFORMATION REGARDING UTILITY LOCATION, SIZE, DEPTH, CONDITION, AND CAPACITY CONTACT UTILITY OR MUNICIPAL/PUBLIC SERVICE FACILITY.
11. UNDERGROUND PIPE SIZES ARE BASED ON VISUAL OBSERVATIONS MADE FROM THE SURFACE AND ARE APPROXIMATE.
12. EASEMENTS AFFECTING THE PROPERTY SHOWN HEREON HAVE BEEN PLOTTED BASED UPON PROVIDED TITLE INFORMATION.

GENERAL NOTES:

SEE SHEET G-003 FOR GENERAL NOTES

811 Know what's below. Call before you dig.

CITY OF SAN LUIS OBISPO

PROJECT TITLE: CALLE JOAQUIN LIFT STATION REPLACEMENT

SHEET TITLE: INVERTED SIPHON CREEK CROSSING - PLAN AND PROFILE: STA. 6+25 TO 11+00

REGISTERED PROFESSIONAL ENGINEER DANIEL S. CROSSLEY No. 73077 CIVIL STATE OF CALIFORNIA

DESIGNED BY:	DC
DRAWN BY:	NR
CHECKED BY:	
APPROVED BY:	
SCALE:	SEE DWG
DATE:	OCTOBER 2020
CITY SPECIFICATION NO.	91133
DRAWING NO.	C-102
SHEET NO.	6 of 56

DWG: \\USBWFPPSPWO1\Data\Work\city of san luis obispo\60225711 - calle joaquin lift station\900_cad_gis\02-sheets\SHT-C-102.dwg USER: GHorstkotte
DATE: Dec 07, 2020 3:55pm XREFS: REF-C-TP REF-C-SP REF-C-LP REF-C-UP REF-C-PP REF-C-EP REF-C-BG CALLE JOAQUIN 2020 IMAGES: SLO embtxm_bmp_med_pc.tif

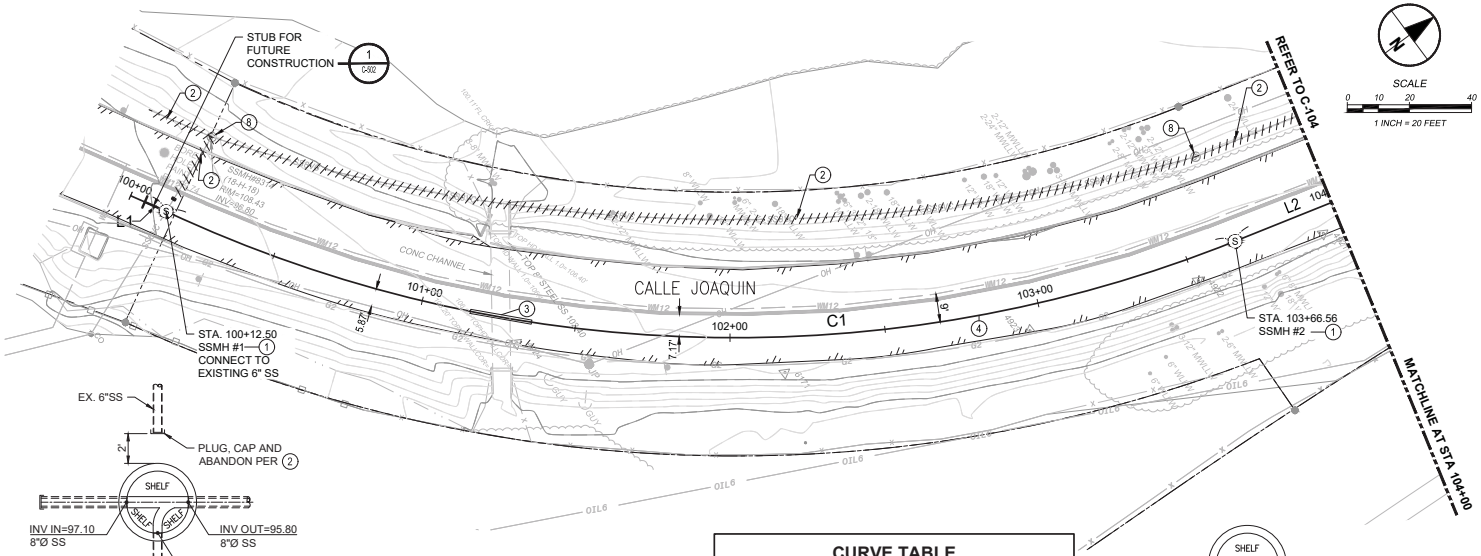

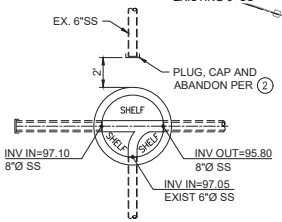

MANHOLE #1
STA. 100+12.50

CURVE TABLE				
CURVE #	RADIUS	LENGTH	EXTERNAL TANGENT	DELTA
C1	432.70	354.06	187.62	46.8826°

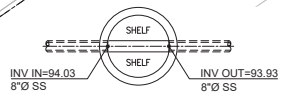

MANHOLE #2
STA. 103+66.56

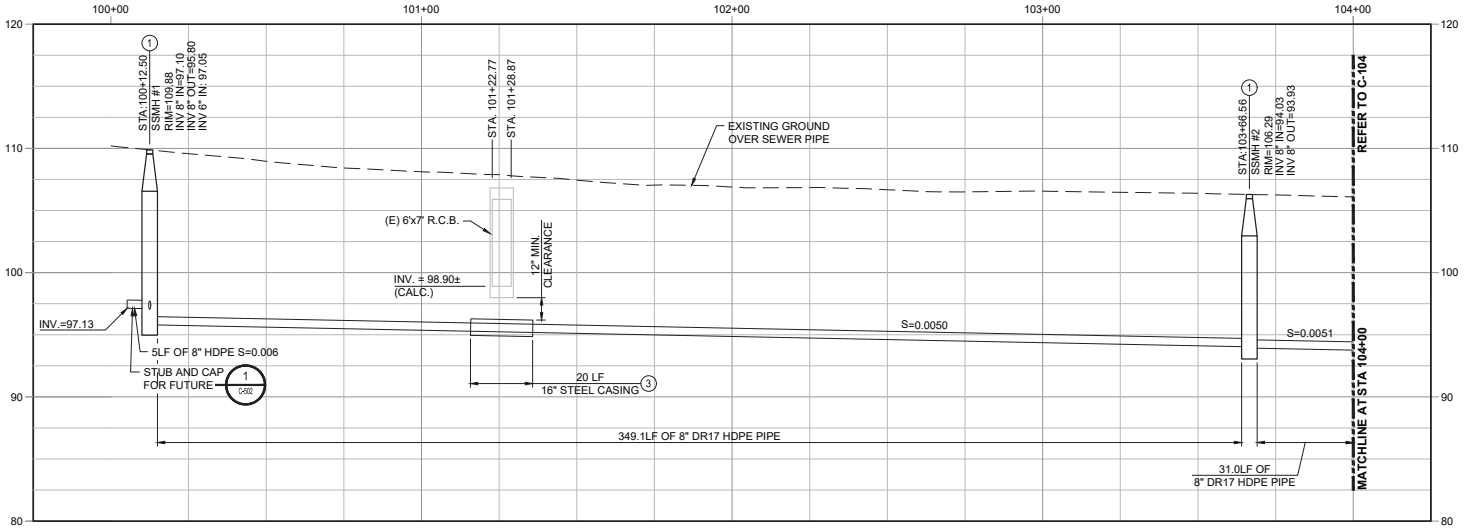

0 20' 40'
H: 1" = 20'
V: 1" = 5'
0 5' 10'

CONSTRUCTION NOTES:

1. FURNISH AND INSTALL NEW 4' DIAMETER SEWER MANHOLE PER ENGINEERING STD 6610. COAT INTERIOR OF MANHOLE PER SPECIFICATION SECTION 099720, AND COAT OUTSIDE PER SPECIFICATION SECTION 034210.
2. ABANDON EXISTING SEWER PER ENGINEERING STD 6050
3. INSTALL 16" STEEL CASING UNDER EXISTING 6'x7' REINFORCED CONCRETE BOX CULVERT PER DETAIL 3 / C-502
4. 8"Ø DR17 HDPE SEWER PIPE PER SPECIFICATION SECTION 402097 AND ENGINEERING STD 6020
8. ABANDON EXISTING MANHOLE PER ENGINEERING STD 6050.
9. UNDERGROUND UTILITY LOCATIONS ARE PLOTTED BASED ON ABOVE GROUND PAINT MARKS BY OTHERS, ABOVE GROUND SURFACE STRUCTURES. ACTUAL LOCATION MAY DIFFER. ADDITIONAL UNDERGROUND UTILITY LINES MAY EXIST. FOR INFORMATION REGARDING UTILITY LOCATION, SIZE, DEPTH, CONDITION, AND CAPACITY CONTACT UTILITY OR MUNICIPAL/PUBLIC SERVICE FACILITY.
10. UNDERGROUND PIPE SIZES ARE BASED ON VISUAL OBSERVATIONS MADE FROM THE SURFACE AND ARE APPROXIMATE.
11. EASEMENTS AFFECTING THE PROPERTY SHOWN HEREON HAVE BEEN PLOTTED BASED UPON PROVIDED TITLE INFORMATION.

GENERAL NOTES:

SEE SHEET G-003 FOR GENERAL NOTES (TYP.)

SEWER MANHOLE - CONTROL*		
SSMH #	NORTHING	EASTING
SSMH #1	2284557.94	5760057.38
SSMH #2	2284825.22	5760274.38

*(POINT AT CENTER OF MANHOLE BASE)

LINE TABLE		
LINE #	LENGTH	DIRECTION
L1	12.50	N61° 13' 17.09"E
L2	267.66	N15° 36' 36.34"E

811 Know what's below. Call before you dig.

PROJECT TITLE: CALLE JOAQUIN LIFT STATION REPLACEMENT

SHEET TITLE: CALLE JOAQUIN GRAVITY SEWER - PLAN AND PROFILE: STA. 100+00 to 104+00

REGISTERED PROFESSIONAL ENGINEER DANIEL S. CROSSLEY No. 73077 CIVIL STATE OF CALIFORNIA

DESIGNED BY:	DC
DRAWN BY:	NR
CHECKED BY:	-
APPROVED BY:	-
SCALE:	SEE DWG
DATE:	OCTOBER 2020
CITY SPECIFICATION NO.	91133
DRAWING NO.	C-103
SHEET NO.	7 of 56

DWG: \\USSWFPPPSWO01\Data\Work\city of san luis obispo\60225711 - calle joaquin lift station\900_cad_gis\02-sheets\SHT-C-103 to C-105.dwg USER: DiBartolucciD
DATE: Dec 07, 2020 3:51pm XREFS: REF-C-TP REF-C-SP REF-C-LP REF-C-SP REF-C-SP REF-C-SP REF-C-SP REF-C-SP IMAGES: SLO.png SLO_emblem_temp_mod_pc.tif

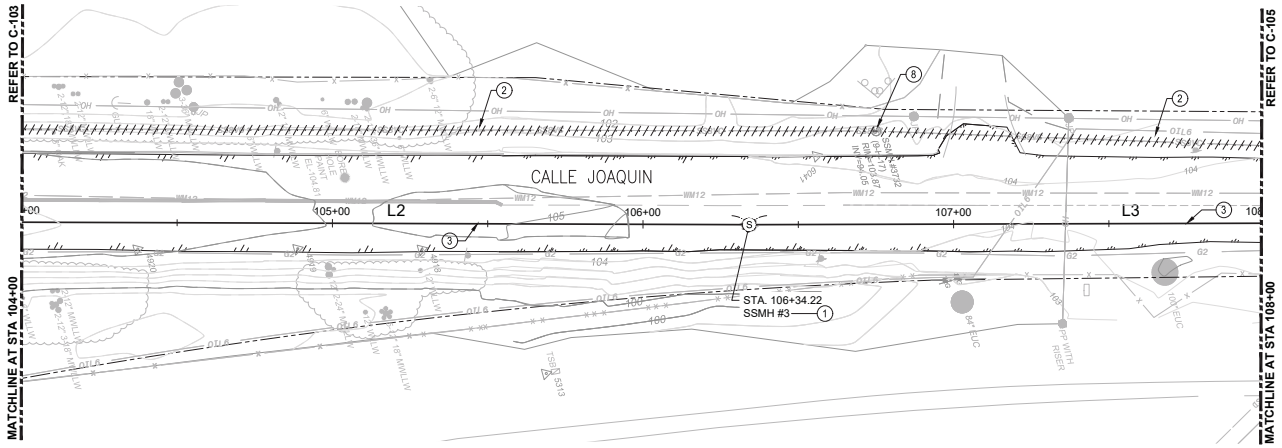

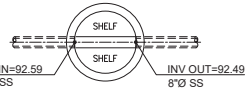

MANHOLE #3
STA. 106+34.22

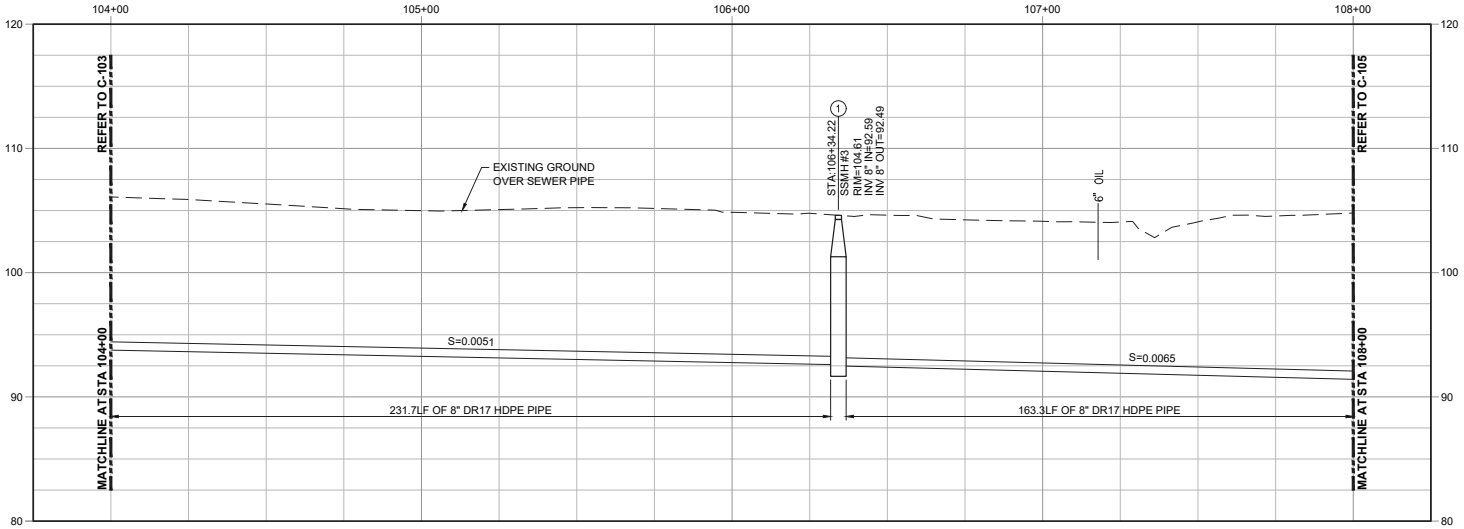

SCALE
0 10 20 40
1 INCH = 20 FEET

CONSTRUCTION NOTES:

1. FURNISH AND INSTALL NEW 4' DIAMETER SEWER MANHOLE PER ENGINEERING STD 6610. COAT INTERIOR OF MANHOLE PER SPECIFICATION SECTION 099720, AND COAT OUTSIDE PER SPECIFICATION SECTION 034210.
2. ABANDON EXISTING SEWER PER ENGINEERING STD 6050
3. 8"Ø DR17 HDPE SEWER PIPE PER SPECIFICATION SECTION 402097 AND ENGINEERING STD 6020
8. ABANDON EXISTING MANHOLE PER ENGINEERING STD 6050.
9. UNDERGROUND UTILITY LOCATIONS ARE PLOTTED BASED ON ABOVE GROUND PAINT MARKS BY OTHERS, ABOVE GROUND SURFACE STRUCTURES. ACTUAL LOCATION MAY DIFFER, ADDITIONAL UNDERGROUND UTILITY LINES MAY EXIST, FOR INFORMATION REGARDING UTILITY LOCATION, SIZE, DEPTH, CONDITION, AND CAPACITY CONTACT UTILITY OR MUNICIPAL/PUBLIC SERVICE FACILITY.
10. UNDERGROUND PIPE SIZES ARE BASED ON VISUAL OBSERVATIONS MADE FROM THE SURFACE AND ARE APPROXIMATE.
11. EASEMENTS AFFECTING THE PROPERTY SHOWN HEREON HAVE BEEN PLOTTED BASED UPON PROVIDED TITLE INFORMATION.

GENERAL NOTES:

SEE SHEET G-003 FOR GENERAL NOTES (TYP.)

SEWER MANHOLE - CONTROL*

SSMH #	NORTHING	EASTING
SSMH #3	2285083.00	5760346.39

*(POINT AT CENTER OF MANHOLE BASE)

LINE TABLE

L2	267.66	N15° 36' 36.34"E
L3	347.35	N15° 15' 30.08"E

Know what's below. Call before you dig.

0 20' 40' H: 1" = 20'
0 5' 10' V: 1" = 5'

CITY OF SAN LUIS OBISPO

PROJECT TITLE: CALLE JOAQUIN LIFT STATION REPLACEMENT

SHEET TITLE: CALLE JOAQUIN GRAVITY SEWER - PLAN AND PROFILE: STA. 104+00 to 108+00

REGISTERED PROFESSIONAL ENGINEER DANIEL S. CROSSLEY No. 73077 CIVIL STATE OF CALIFORNIA

DESIGNED BY:	DC
DRAWN BY:	NR
CHECKED BY:	-
APPROVED BY:	-
SCALE:	SEE DWG
DATE:	OCTOBER 2020
CITY SPECIFICATION NO.	91133
DRAWING NO.	C-104
SHEET NO.	8 of 56

DWG: \\USSWFPPSPWO01\Data\Work\city of san luis obispo\60225711 - calle joaquin lift station\WOD_cond_plh\02-sheets\SHT-C-103 to C-105.dwg USER: DMartinez@
DATE: Dec 07, 2020 3:51pm REFS: REF-C-TP REF-C-IP REF-C-SP REF-C-GP REF-C-SF REF-C-SP KSBY REF-C-IP REF-D-BD CALLE JOAQUIN 2020 IMAGES: SLO.jpg SLO_emblem_bmp_med_pc.tif

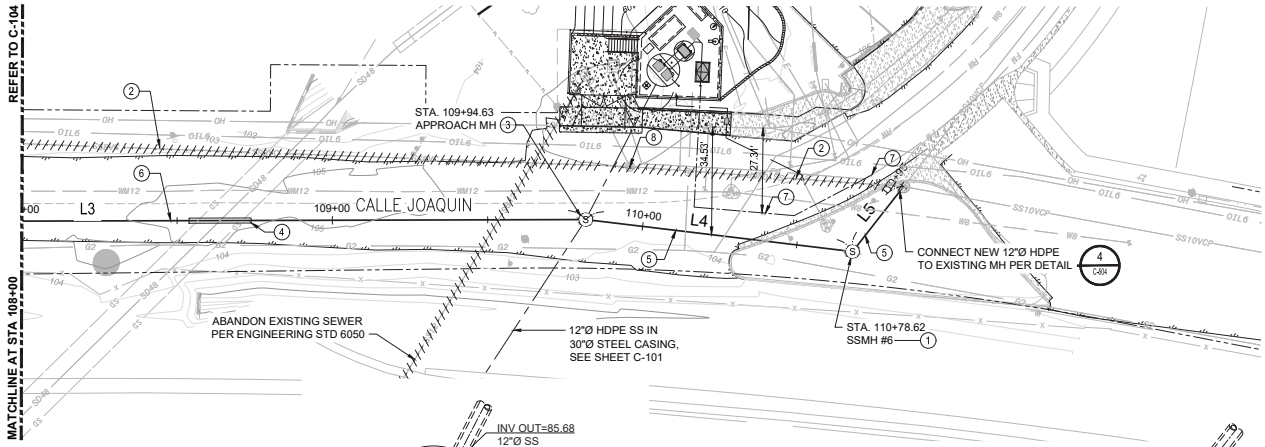

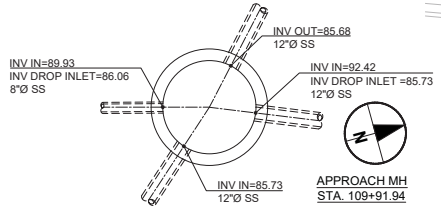

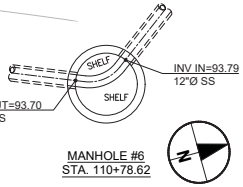

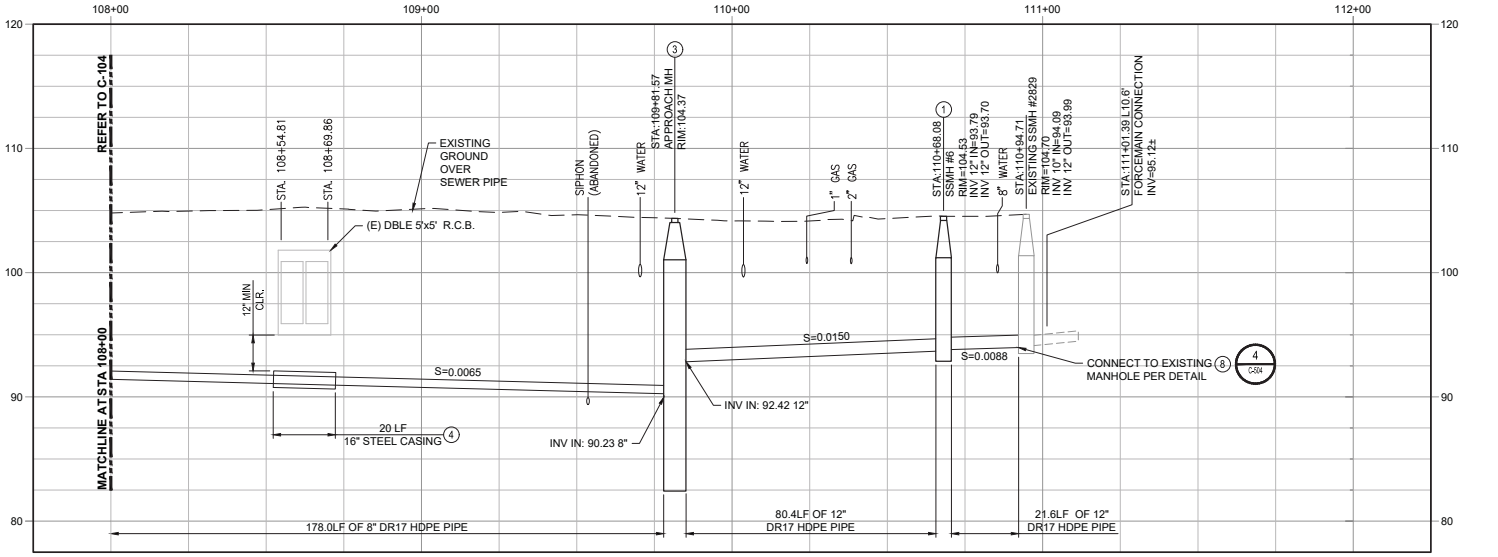

0 20' 40' H: 1" = 20'
0 5' 10' V: 1" = 5'

CONSTRUCTION NOTES:

1. FURNISH AND INSTALL NEW 4' DIAMETER SEWER MANHOLE PER ENGINEERING STD 6610. COAT INTERIOR OF MANHOLE PER SPECIFICATION SECTION 099720, AND COAT OUTSIDE PER SPECIFICATION SECTION 034210.
2. ABANDON EXISTING SEWER PER ENGINEERING STD 6050
3. FURNISH AND INSTALL NEW 6' DIAMETER APPROACH MANHOLE PER DETAIL (1 / C-505) COAT INTERIOR OF MANHOLE PER SPECIFICATION SECTION 099720, AND COAT OUTSIDE PER SPECIFICATION SECTION 034210
4. JACK AND BORE 16" STEEL CASING UNDER EXISTING DOUBLE 5'x5' REINFORCED CONCRETE BOX CULVERT PER DETAIL (3 / C-202)
5. 12"Ø DR17 HDPE SEWER PIPE PER SPECIFICATION SECTION 402097 AND ENGINEERING STD. 6020
6. 8"Ø DR17 HDPE SEWER PIPE PER SPECIFICATION SECTION 402097 AND ENGINEERING STD 6020
7. 10"Ø DR17 HDPE SEWER FORCE MAIN, SEE SHEET C-202
8. ABANDON EXISTING MANHOLE PER ENGINEERING STD 6050
9. UNDERGROUND UTILITY LOCATIONS ARE PLOTTED BASED ON ABOVE GROUND PAINT MARKS BY OTHERS, ABOVE GROUND SURFACE STRUCTURES. ACTUAL LOCATION MAY DIFFER. ADDITIONAL UNDERGROUND UTILITY LINES MAY EXIST. FOR INFORMATION REGARDING UTILITY LOCATION, SIZE, DEPTH, CONDITION, AND CAPACITY CONTACT UTILITY OR MUNICIPAL/PUBLIC SERVICE FACILITY.
10. UNDERGROUND PIPE SIZES ARE BASED ON VISUAL OBSERVATIONS MADE FROM THE SURFACE AND ARE APPROXIMATE.
11. EASEMENTS AFFECTING THE PROPERTY SHOWN HEREON HAVE BEEN PLOTTED BASED UPON PROVIDED TITLE INFORMATION.

GENERAL NOTES:

SEE SHEET G-003 FOR GENERAL NOTES (TYP.)

SEWER MANHOLE - CONTROL*

SSMH #	NORTHING	EASTING
Approach MH	2285429.06	5760422.82
SSMH #6	2285498.17	5760470.57

*(POINT AT CENTER OF MANHOLE BASE)

LINE TABLE

L3	347.35	N15° 15' 30.08"E
L4	86.51	N22° 15' 34.76"E
L5	26.63	N36° 26' 48.06"W

811 Know what's below. Call before you dig.

PROJECT TITLE: CALLE JOAQUIN LIFT STATION REPLACEMENT

SHEET TITLE: CALLE JOAQUIN GRAVITY SEWER - PLAN AND PROFILE: STA. 108+00 to 111+25

REGISTERED PROFESSIONAL ENGINEER DANIEL S. CROSSLEY No. 73077 CIVIL STATE OF CALIFORNIA

DESIGNED BY:	DC
DRAWN BY:	NR
CHECKED BY:	-
APPROVED BY:	-
SCALE:	SEE DWG
DATE:	OCTOBER 2020
CITY SPECIFICATION NO.	91133
DRAWING NO.	C-105
SHEET NO.	9 of 56

DWG: \\USSWFPPSRWO1\Data\Work\city of san luis obispo\32025711 - calle joaquin lift station\900_cad_gis\02-sheets\SHT-C-103 to C-105.dwg USER: DiBartolucciD
DATE: Dec 07, 2020 3:51pm REFS: REF-C-TP REF-C-SP REF-C-LP REF-C-SP REF-C-LP REF-C-SP REF-C-LP REF-C-SP IMAGES: SLO.jpg SLO_emblem_bmp_mod_pc.tif

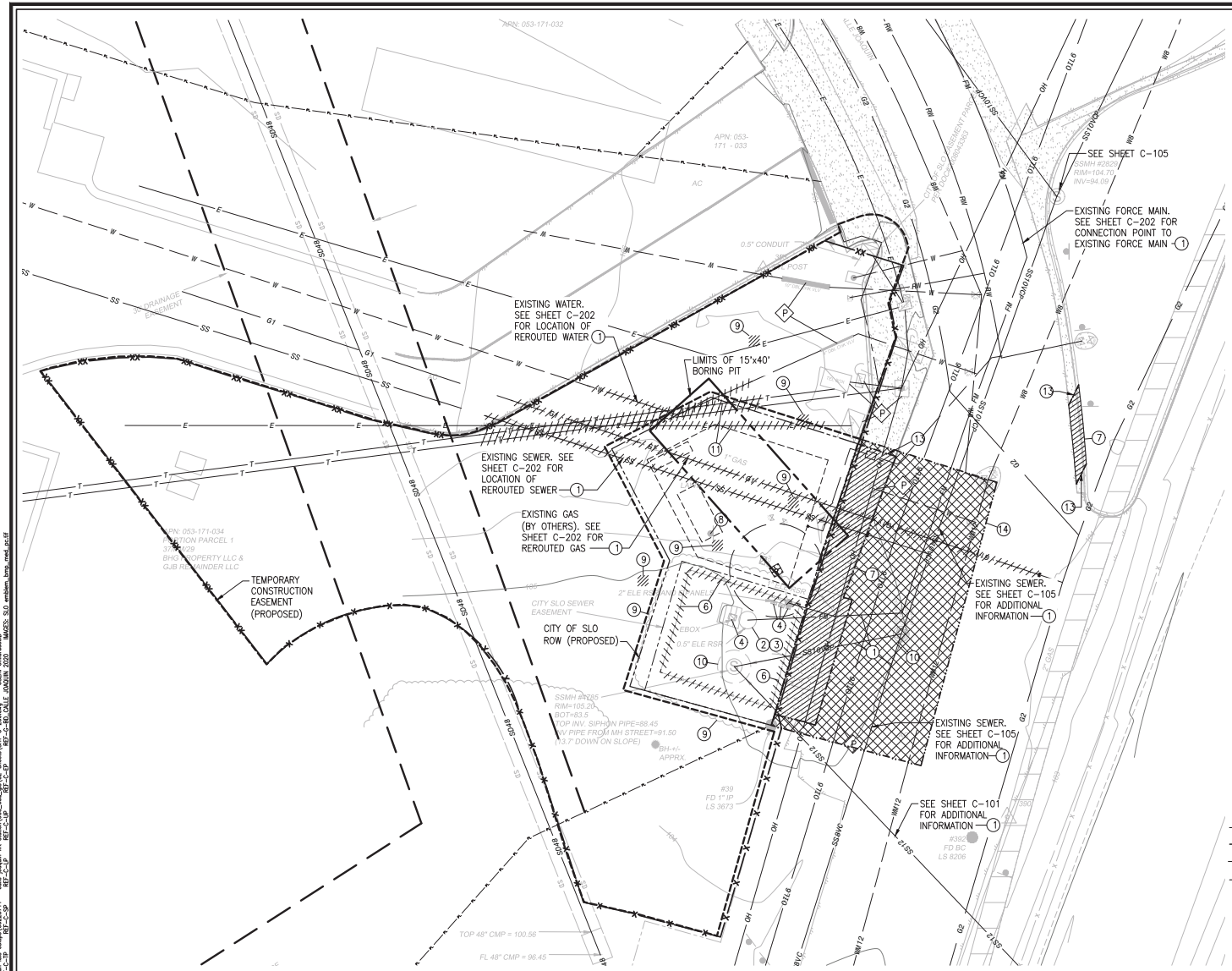

SITE DEMOLITION PLAN

SCALE: 1" = 10'-0"

1 / -

N

SCALE

0 5 10 20

1 INCH = 10 FEET

DEMOLITION NOTES

ITEM	DESCRIPTION
P	PROTECT-IN-PLACE, OR REMOVE AND REPLACE AS NECESSARY. COORDINATE WITH PG&E FOR ELECTRICITY AND THE GAS COMPANY FOR GAS.
1	CUT AND REMOVE AS NECESSARY. PLUG OR CAP REMAINING SECTIONS. COORDINATE WITH PG&E FOR ELECTRICITY AND THE GAS COMPANY FOR GAS.
2	REMOVE AND DISPOSE OF PIPING, VALVE, GAUGES, SWITCHES, AND OTHER APPURTENANCES ASSOCIATED WITH THE EXISTING LIFT STATION.
3	DISPOSE OF EXISTING LIFT STATION.
4	REMOVE AND DISPOSE OF ELECTRICAL AND CONTROL PANELS PER SHEET E-103.
6	REMOVE AND DISPOSE OF EXISTING CHAIN LINK FENCE.
7	REMOVE AND DISPOSE OF EXISTING SIDEWALK, CURB AND GUTTER, DRIVEWAY APPROACH.
8	REMOVE AND COORDINATE WITH CITY FOR RELOCATION EXISTING SIGN.
9	REMOVE AND DISPOSE OF TREES AND LANDSCAPING
10	ABANDON AND FILL EXISTING MANHOLE WITH CLASS II MATERIAL OR ENGINEERED FILL.
11	REROUTE EXISTING ELECTRICAL AND COMMUNICATION LINES TO AVOID CONSTRUCTION JACKING PIT PER ELECTRICAL PLANS. (BY OTHERS)
13	SAW CUT EXISTING CONCRETE
14	SAW CUT AND REPLACE EXISTING PAVEMENT

NOTES:

1. PROTECT EXISTING REMAINING UNDERGROUND UTILITIES PER SECTION 020120.
2. CONTRACTOR TO BE AWARE OF OVERHEAD POWER LINES. COORDINATE WITH PG&E.

LEGEND:

- SAWCUT LINE
- 10-FOOT TALL TEMPORARY CONSTRUCTION FENCE
- 6-FOOT TALL TEMPORARY CONSTRUCTION FENCE
- TEMPORARY CONSTRUCTION EASEMENT LINE
- EXISTING SEWER LINE TO BE REMOVED
- EXISTING WATER LINE TO BE REMOVED
- EXISTING GAS LINE TO BE REMOVED
- EXISTING FENCE TO BE REMOVED
- EXISTING CONCRETE TO BE REMOVED
- EXISTING PAVEMENT TO BE REPLACED
- RECEIVING PIT

811 Know what's below. Call before you dig.

CITY OF SAN LUIS OBISPO

PROJECT TITLE: CALLE JOAQUIN LIFT STATION REPLACEMENT

SHEET TITLE: CALLE JOAQUIN LIFT STATION - DEMOLITION PLAN

REGISTERED PROFESSIONAL ENGINEER DANIEL S. CROSSLEY No. 73077 CIVIL STATE OF CALIFORNIA

DESIGNED BY:	DC
DRAWN BY:	NR
CHECKED BY:	-
APPROVED BY:	-
SCALE:	SEE DWG
DATE:	OCTOBER 2020
CITY SPECIFICATION NO.	91133
DRAWING NO.	C-200
SHEET NO.	10 of 56

DWG: \\USSWFPPSRWO1\Data\Work\city of san luis obispo\60225711 - calle joaquin lift station\WO_cost_gdt\02-sheets\SHT-C-200.dwg USER: GHorsley
DATE: Dec 07, 2020 3:51pm XREFS: REF-C-TP REF-C-SP REF-C-LP REF-C-UP REF-C-EP REF-C-BG CALLE JOAQUIN 2020 IMAGES: SLO embarc, temp_medi_pc.tif

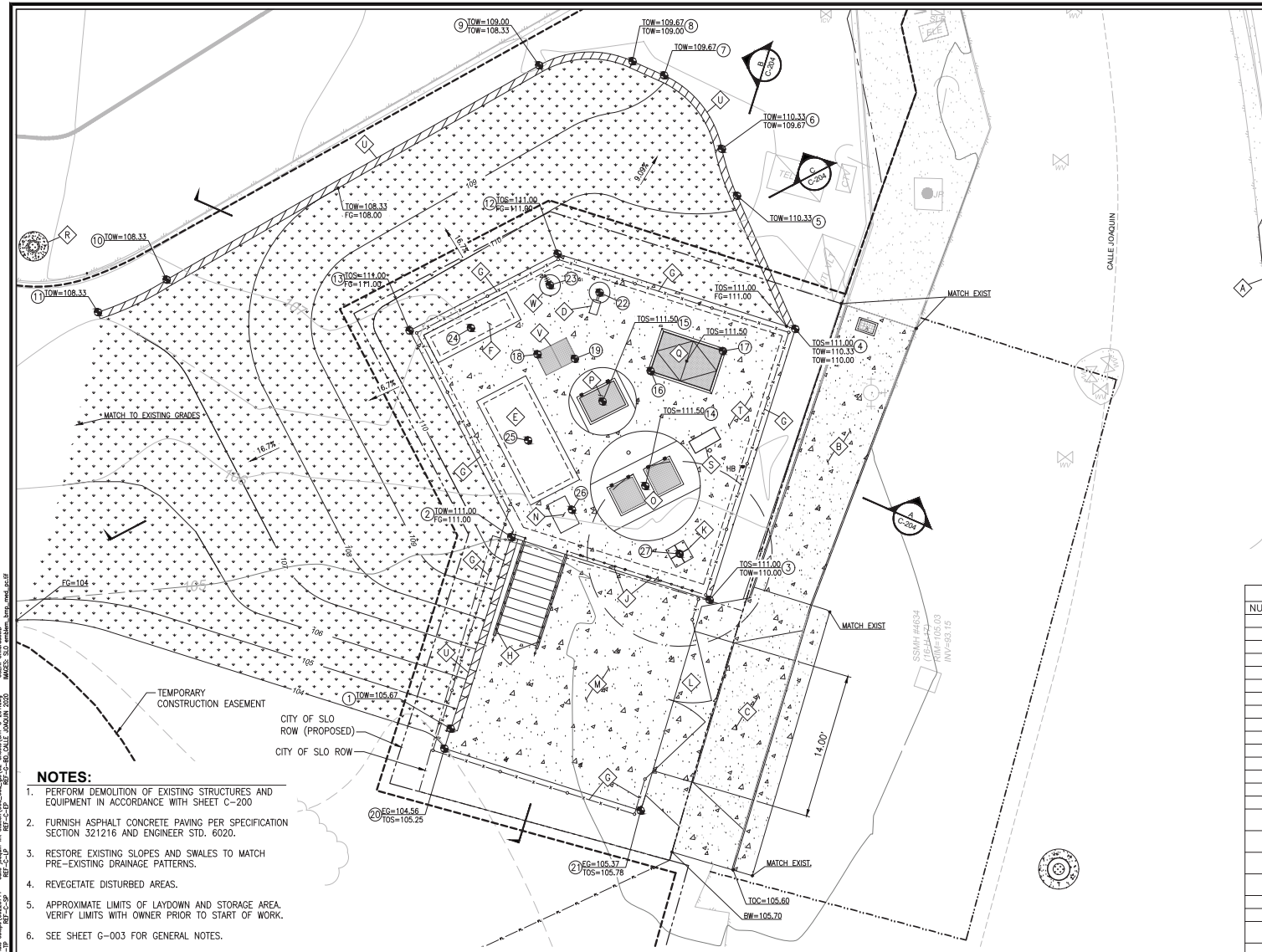

CONSTRUCTION NOTES:

- (A) NEW CURB AND GUTTER. MATCH EXISTING
- (B) NEW DETACHED SIDEWALK, CURB, AND PAVEMENT PER ENGINEER STD. 4020 AND 4110
- (C) NEW DRIVEWAY AND PAVEMENT APPROACH PER ENGINEER STD. 2110
- (D) OVERHEAD LIGHT, SEE SHEET E-103
- (E) EMERGENCY GENERATOR, SEE SHEET E-103
- (F) ELECTRICAL PANELS, SEE SHEET E-103
- (G) SLATED CHAIN LINK FENCE — 2 / C-503
- (H) ALUMINUM HAND RAIL — 10 / S-502
- (J) REMOVABLE ALUMINUM HANDRAIL — 14 / S-502
- (K) DAVIT CRANE PER SECTION 412215
- (L) 16' DOUBLE GATE — 1 / C-503
- (M) 8-INCH THICK CONCRETE PAVEMENT, WITH #6 @ 16-INCHES, BOTH WAYS, SIMILAR TO — 2 / S-501
- (N) ELECTRICAL PULL BOX
- (O) WET WELL, SEE SHEET C-507
- (P) VALVE VAULT — 2 / C-506
- (Q) METER VAULT — 2 / C-502
- (R) CLEANOUT — 1 / C-506
- (S) ODOR CONTROL UNIT — 3 / C-505
- (T) WET WELL TOP SLAB — 1 / S-103
- (U) RETAINING WALL — 1 / S-102
- (V) CLEANOUT VALVE BOX
- (W) MONOPOLE ANTENNA MAST — 1 / N-002

NOTES:

1. PERFORM DEMOLITION OF EXISTING STRUCTURES AND EQUIPMENT IN ACCORDANCE WITH SHEET C-200
2. FURNISH ASPHALT CONCRETE PAVING PER SPECIFICATION SECTION 321216 AND ENGINEER STD. 6020.
3. RESTORE EXISTING SLOPES AND SWALES TO MATCH PRE-EXISTING DRAINAGE PATTERNS.
4. REVEGETATE DISTURBED AREAS.
5. APPROXIMATE LIMITS OF LAYDOWN AND STORAGE AREA. VERIFY LIMITS WITH OWNER PRIOR TO START OF WORK.
6. SEE SHEET G-003 FOR GENERAL NOTES.
7. THE CONTOUR INTERVAL IS 1 FOOT.

COORDINATES

NUMBER	NORTHING	EASTING	DESCRIPTION
1	2285431.62	5760379.32	BEGINNING OF WALL
2	2285450.05	5760385.15	CORNER OF PAD
3	2285444.02	5760404.22	CORNER OF PAD
4	2285470.08	5760412.47	CORNER OF PAD
5	2285482.91	5760406.86	BC AT WALL
6	2285487.41	5760405.40	PRC AT WALL
7	2285494.47	5760399.85	EC AT WALL
8	2285495.84	5760396.81	BC AT WALL
9	2285495.44	5760387.83	EC AT WALL
10	2285474.82	5760352.01	BC AT WALL
11	2285471.69	5760345.40	END OF WALL
12	2285477.31	5760389.61	CORNER OF PAD
13	2285469.91	5760375.37	CORNER OF PAD
14	2285454.97	5760398.04	CENTER OF WET WELL
15	2285463.11	5760393.93	CENTER OF VALVE VAULT
16	2285466.03	5760398.55	WEST INSIDE CORNER OF METER VAULT
17	2285467.96	5760405.50	EAST INSIDE CORNER OF METER VAULT
18	2285467.65	5760387.67	WEST INSIDE CORNER OF CLEANOUT VALVE BOX
19	2285467.21	5760391.25	EAST INSIDE CORNER OF CLEANOUT VALVE BOX
20	2285429.71	5760378.72	CORNER OF CONC. SLAB
21	2285423.74	5760397.59	CORNER OF CONC. SLAB
22	2285473.59	5760393.64	CENTER OF LIGHT POLE FOOTING
23	2285474.30	5760388.87	CENTER OF ANTENNA FOOTING
24	2285470.18	5760381.27	CENTER OF ELECTRICAL PANELS
25	2285459.35	5760386.77	CENTER OF EMERGENCY GENERATOR
26	2285452.68	5760390.99	CENTER OF ELECTRICAL PULL BOX
27	2285448.44	5760401.34	CENTER OF DAVIT CRANE

COORDINATE LOCATION

LEGEND:

- LIMITS OF PAVEMENT REPLACEMENT
- CHAIN LINK FENCE
- TEMPORARY CONSTRUCTION EASEMENT LINE
- RETAINING WALL
- CONCRETE PAVEMENT
- LANDSCAPING AREA

SCALE
0 5 10 20
1 INCH = 10 FEET

Know what's below. Call before you dig.

SITE AND GRADING PLAN (1)
SCALE: 1" = 5'-0"

CITY OF SAN LUIS OBISPO

CALLE JOAQUIN LIFT STATION REPLACEMENT

PROJECT TITLE:

SHEET TITLE: CALLE JOAQUIN LIFT STATION - SITE AND GRADING PLAN

REGISTERED PROFESSIONAL ENGINEER — DANIEL S. CROSSLIN — No. 73077 — CIVIL — STATE OF CALIFORNIA

DESIGNED BY:	DC
DRAWN BY:	NR
CHECKED BY:	-
APPROVED BY:	-
SCALE:	SEE DWG
DATE:	OCTOBER 2020
CITY SPECIFICATION NO.	91133
DRAWING NO.	C-201
SHEET NO.	11 of 56

DWG: \\USER\FTPPSWO1\Jobs\Work\city of san luis obispo\60225711 - calle joaquin lift station\900_cad_gis\02-sheets\SHT-C-201.dwg USER: GlbordaccD
DATE: Dec 07, 2020 3:25pm XREFS: REF-C-TP REF-C-BS REF-C-LP REF-C-SP IMAGES: SLO emblem, bmp_med, jpg

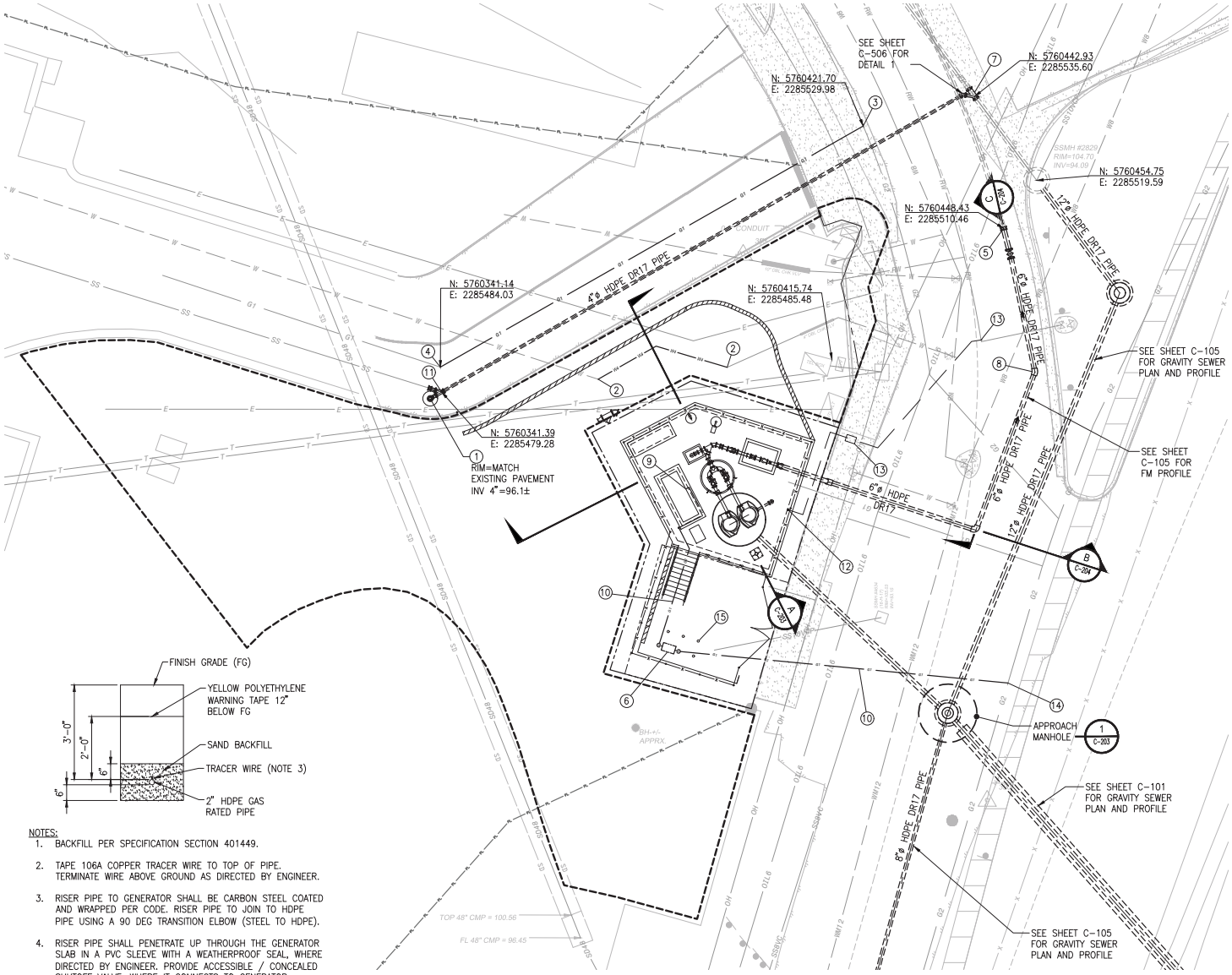

NOTES:

1. BACKFILL PER SPECIFICATION SECTION 401449.
2. TAPE 106A COPPER TRACER WIRE TO TOP OF PIPE. TERMINATE WIRE ABOVE GROUND AS DIRECTED BY ENGINEER.
3. RISER PIPE TO GENERATOR SHALL BE CARBON STEEL COATED AND WRAPPED PER CODE. RISER PIPE TO JOIN TO HDPE PIPE USING A 90 DEG TRANSITION ELBOW (STEEL TO HDPE).
4. RISER PIPE SHALL PENETRATE UP THROUGH THE GENERATOR SLAB IN A PVC SLEEVE WITH A WEATHERPROOF SEAL, WHERE DIRECTED BY ENGINEER. PROVIDE ACCESSIBLE / CONCEALED SHUTOFF VALVE, WHERE IT CONNECTS TO GENERATOR.

UTILITY PLAN

SCALE: 1" = 10'-0"

1 / -

N

SCALE

0 5 10 20

1 INCH = 10 FEET

CONSTRUCTION NOTES:

1. INSTALL SANITARY SEWER CLEANOUT — 1 / C-506
2. CONNECT TO EXISTING 4" WATER LINE
3. CONNECT TO EXISTING GAS (BY OTHERS)
4. CONNECT TO EXISTING GAS W/ 1" – 45° PE ELBOW. COORDINATE WITH THE SOUTHERN CALIFORNIA GAS COMPANY
5. CONNECT TO EXISTING PVC FORCE MAIN WITH RESTRAINED TRANSITION COUPLING — 2 / C-505
6. GAS METER SET ASSEMBLY
7. CONNECT TO EXISTING 10" SEWER WITH FERNCO WYE SADDLE TAP OR APPROVED EQUAL.
8. 10" – 22.5° HDPE ELBOW
9. CONNECT NEW GAS TO GENERATOR PER MANUFACTURERS RECOMMENDATIONS, SEE DETAIL — 1 / C-505
10. 1" PE GAS PER SPECIFICATION SECTION 401449.
11. CONNECT EXISTING SEWER LATERAL PER DETAIL — 1 / C-506
12. QUICK COUPLER PER DETAIL — 4 / C-505
13. 1" RECYCLED WATER SERVICE CONNECTION AND METER PER ENGINEER STD. 6210
14. CONNECT TO EXISTING GAS LINE
15. GUARD POST

NOTES:

1. SUBMIT DEWATERING PLAN PER SPECIFICATION SECTION 312319 AND SHORING PLAN PER SPECIFICATION SECTION 314100.
2. MAINTAIN SEWER SERVICE AT ALL TIMES. TEMPORARY BYPASS PUMPING WILL BE REQUIRED DURING CONSTRUCTION. SUBMIT BYPASS PLAN IN ACCORDANCE WITH SPECIFICATION SECTION 015800.
3. PERFORM DEMOLITION OF EXISTING STRUCTURES AND EQUIPMENT IN ACCORDANCE WITH SHEET C-200.
4. POTHOLE EXISTING UTILITIES WHERE INDICATED (PH) PER SPECIFICATION SECTION 023219 PRIOR TO BEGINNING CONSTRUCTION. PROVIDE OWNER'S REPRESENTATIVE WITH POTHOLE REPORT.
5. INSTALL UNDERGROUND UTILITIES PER SPECIFICATION SECTION 312316 AND CITY STANDARD 6020.
6. SEE SHEET G-003 FOR GENERAL NOTES.

811 Know what's below. Call before you dig.

CITY OF SAN LUIS OBISPO

PROJECT TITLE: CALLE JOAQUIN LIFT STATION REPLACEMENT

SHEET TITLE: CALLE JOAQUIN LIFT STATION - UTILITY PLAN

REGISTERED PROFESSIONAL ENGINEER — DANIEL S. CROUSTIS — No. 73077 — CIVIL — STATE OF CALIFORNIA

DESIGNED BY:	DC
DRAWN BY:	NR
CHECKED BY:	-
APPROVED BY:	-
SCALE:	SEE DWG
DATE:	OCTOBER 2020
CITY SPECIFICATION NO.	91133
DRAWING NO.	C-202
SHEET NO.	12 of 56

DWG: \\USSWI1PPSPWO1\Data\Work\city of san luis obispo\60225711 - calle joaquin lift station\900_cad_gis\02-sheets\SHT-C-202.dwg USER: GHolmes@CD
DATE: Dec 07, 2020 3:25pm XREFS: REF-C-TP REF-C-BS REF-C-EP REF-C-UP REF-C-LP REF-C-SP IMAGES: S10_emblem_temp_mesh_pc.tif

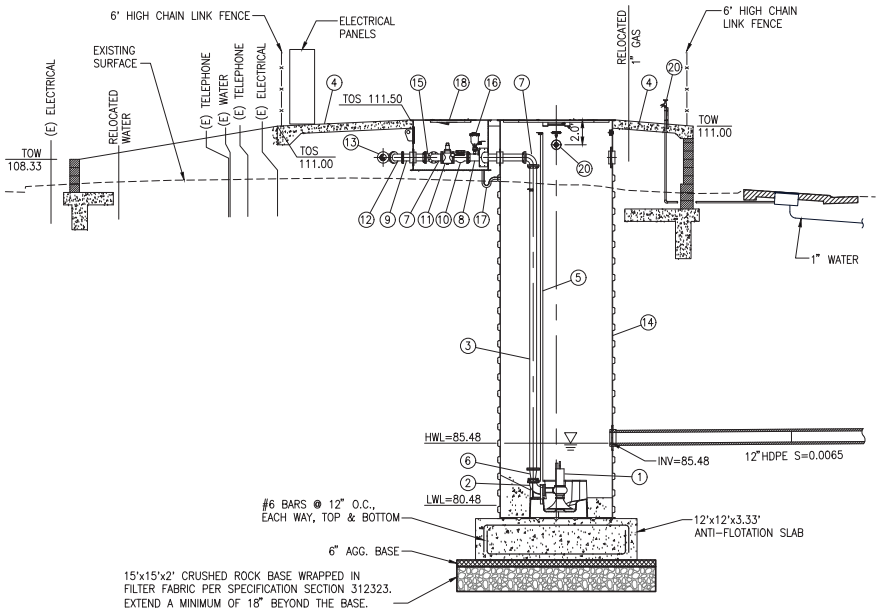

FRP LIFT STATION

SCALE: 1" = 5'-0"

A

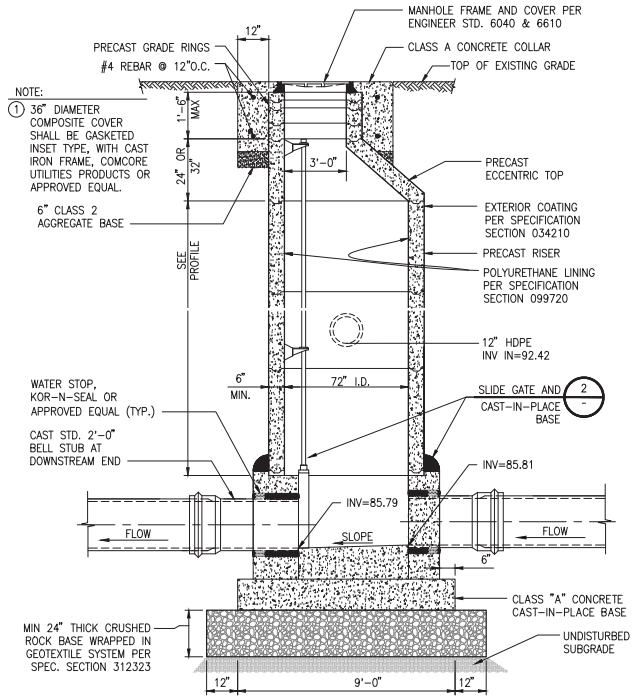

72" APPROACH MANHOLE

NOT TO SCALE

1

MATERIALS LIST

ITEM	DESCRIPTION	
1	SUBMERSIBLE SCREW CENTRIFUGAL PUMP PER SECTION 432132.	
2	4" DI DISCHARGE ELBOW	
3	6"ø x 20'-0" SST SPOOL, FLGxFLG	
4	8" LIFT STATION SLAB	
5	GUIDE RAILS, 2½" TYPE 316 SST SCH 80	
6	6"x4" REDUCER	
7	6" DI 90° ELBOW, FLGxFLG	
8	6"ø DI SPOOL, FCTF, FLGxPE	
9	6"ø x 2'-0" DI SPOOL PExFLG	
10	6" CHECK VALVE PER SECTION 400520, FLGxFLG X 2	
11	6" PLUG VALVE PER SECTION 400520, FLGxFLG X 2	
12	6" DI 45° ELBOW, FLGxFLG	
13	6" DI WYE, FLG'D	
14	8'-0"ø FRP WET WELL	1 / C-507
15	6"x6"x6" TEE DI, FLG'D	
16	2" COMBINATION AIR VALVE PER SECTION 400560 X 2	
17	2" PVC DRAIN W/ P-TRAP	
18	6'-0"ø FRP VALVE VAULT	2 / C-508
19	4"ø DI CONNECTION TO ODOR CONTROL UNIT	
20	HOSE BIBB WITH QUICK COUPLING ADAPTER	4 / C-505

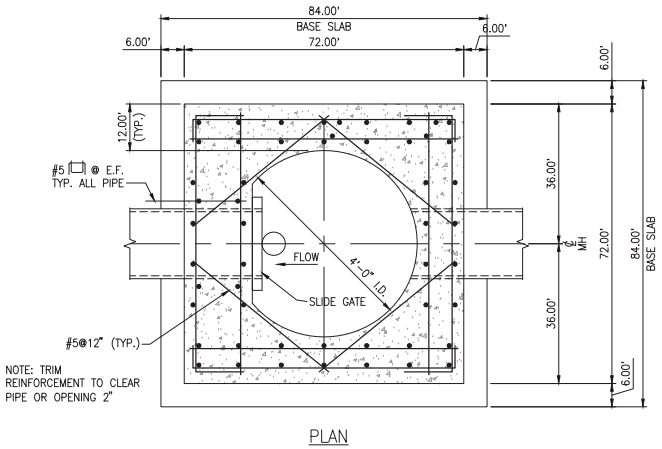

PLAN

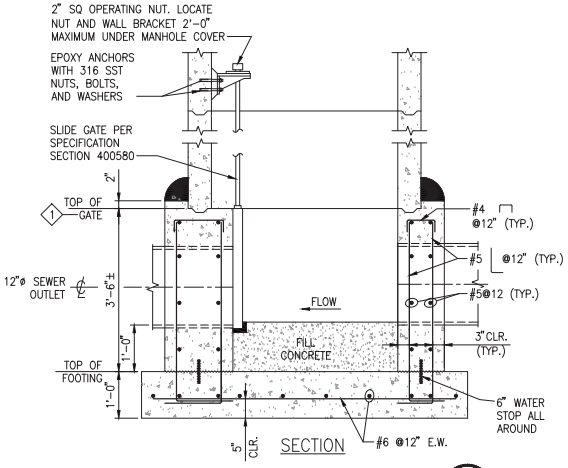

SECTION

CAST-IN-PLACE MANHOLE BASE

NOT TO SCALE

2

NOTES:

1. SEE SHEET G-003 FOR GENERAL NOTES.
2. LINE AND COAT ALL DUCTILE IRON PIPE AND FITTINGS PER SPECIFICATION SECTION 099761.

Know what's below. Call before you dig.

PROJECT TITLE: CALLE JOAQUIN LIFT STATION REPLACEMENT

SHEET TITLE: CALLE JOAQUIN LIFT STATION AND APPROACH MANHOLE DETAILS

REGISTERED PROFESSIONAL ENGINEER DANIEL S. CROSSLEY No. 73077 CIVIL STATE OF CALIFORNIA

DESIGNED BY:	DC
DRAWN BY:	NR
CHECKED BY:	-
APPROVED BY:	-
SCALE:	SEE DWG
DATE:	OCTOBER 2020
CITY SPECIFICATION NO.	91133
DRAWING NO.	C-203
SHEET NO.	13 of 56

DWG: \\USSWFPPSPWO1\Data\Work\city of san luis obispo\60225711 - calle joaquin lift station\900_cad_gis\02-sheets\SHT-C-203.dwg USER: GhBerdacoD
DATE: Dec 07, 2020 3:25pm XREFS: REF-C-TP REF-C-SP REF-C-LP REF-C-BS CALLE JOAQUIN 2020 IMAGES: S10 emblem_bmp_med_pc.bf

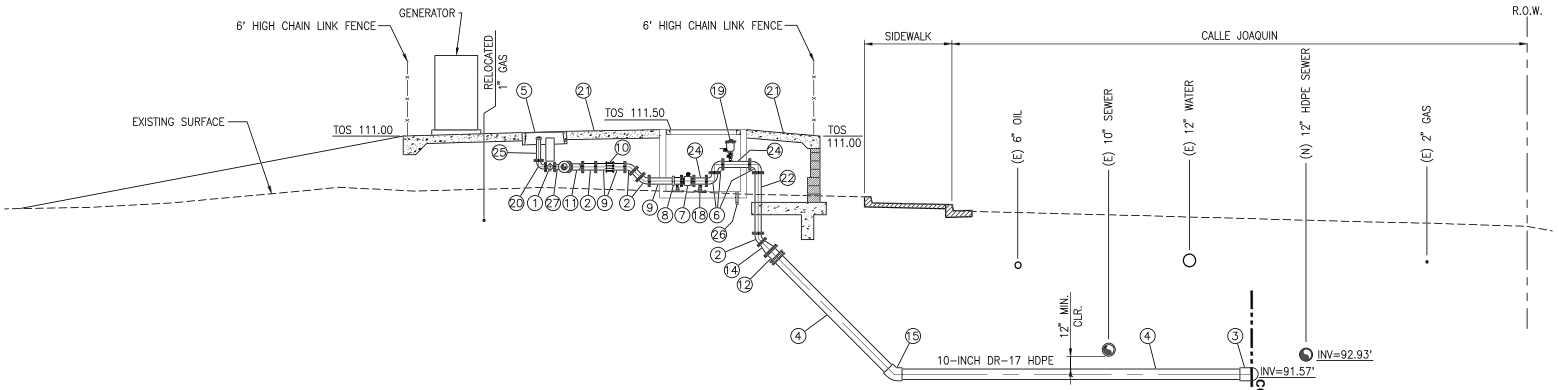

SECTION B

SCALE: 1" = 5'-0"

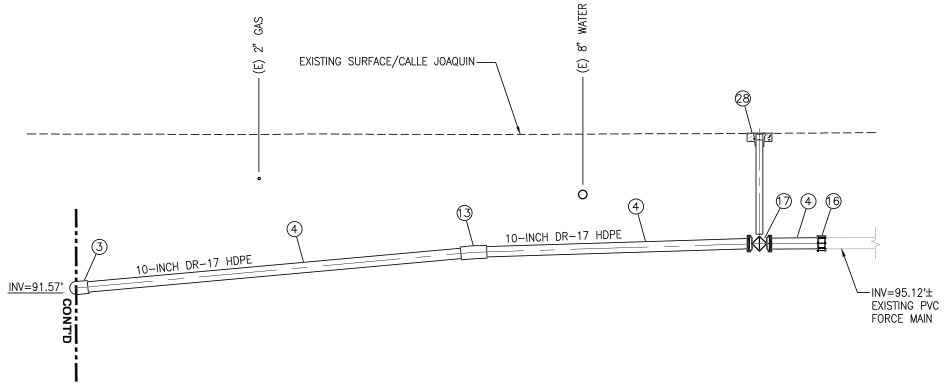

SECTION C

SCALE: 1" = 5'-0"

MATERIALS LIST

ITEM	DESCRIPTION	
1	4" PLUG VALVE, FLGxFLG	
2	6" DI 45° ELBOW, FLGxFLG	
3	10" 90° LONG RADIUS HDPE ELBOW	
4	10"ø HDPE DR-17 PIPE, FCTF, WITH TRACER WIRE	
5	24"x36" PRECAST CONCRETE VAULT	
6	6" DI 90° ELBOW, FLGxFLG	
7	6" MAGNETIC FLOW METER PER SECTION 409115	
8	6" GROOVED COUPLING	
9	6" DI SPOOL, PExFLG	
10	6" FLEXIBLE COUPLING	
11	6" DI WYE, FLG'D	
12	12" FLG COUPLING ADAPTER	
13	10" 22.5° HDPE ELBOW	
14	10"x6" DI FLG'D REDUCER	
15	10" 45° HDPE ELBOW DR17	
16	RESTRAINED TRANSITION COUPLING	2 / C-505
17	10" PLUG VALVE	
18	PIPE SUPPORT	2 / C-501
19	2" COMBINATION AIR VALVE PER SECTION 400560 X 2	
20	4" 90° DI ELBOW, FLGxFLG	
21	8" LIFT STATION SLAB	1 / S-103
22	6"ø x 5'-0" DI SPOOL, FCTF, FLGxFLG	
23	PRECAST CONCRETE METER VAULT	2 / C-502
24	6" DI PIPE SPOOL, FLGxFLG	
25	4" DI RISER WITH THREADED CAP	
26	2" PVC DRAIN W/ P-TRAP	
27	6" x 4" REDUCER, FLG'D	
28	VALVE BOX	1 / C-501

NOTES:

1. SEE SHEET G-003 FOR GENERAL NOTES.
2. LINE AND COAT ALL DUCTILE IRON PIPE AND FITTINGS PER SPECIFICATION SECTION 099761.

811 Know what's below. Call before you dig.

PROJECT TITLE: CALLE JOAQUIN LIFT STATION REPLACEMENT

SHEET TITLE: CALLE JOAQUIN LIFT STATION AND APPROACH MANHOLE DETAILS

REGISTERED PROFESSIONAL ENGINEER DANIEL S. CROMWELL No. 73077 CIVIL STATE OF CALIFORNIA

DESIGNED BY:	DC
DRAWN BY:	NR
CHECKED BY:	-
APPROVED BY:	-
SCALE:	SEE DWG
DATE:	OCTOBER 2020
CITY SPECIFICATION NO.	91133
DRAWING NO.	C-204
SHEET NO.	14 of 56

DWG: \\LOSHPIPPSWO01\Data\work\City of San Luis Obispo\60225711 - Calle Joaquin Lift Station\900 CAD GIS\02-SHEETS\SHT-C-204.dwg USER: DHiendacz0
DATE: Dec 07, 2020 4:12pm XREFS: REF-C-TP REF-C-SP REF-C-LP REF-C-RB CALLE JOAQUIN 2020 XREFS: SLO mnlsem temp mnsl.pc.tif

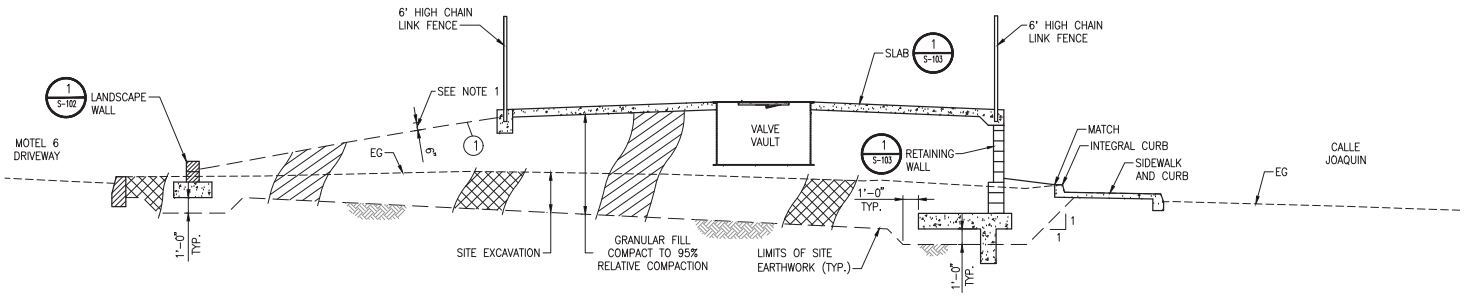

SECTION A
SCALE: 1" = 4'-0"

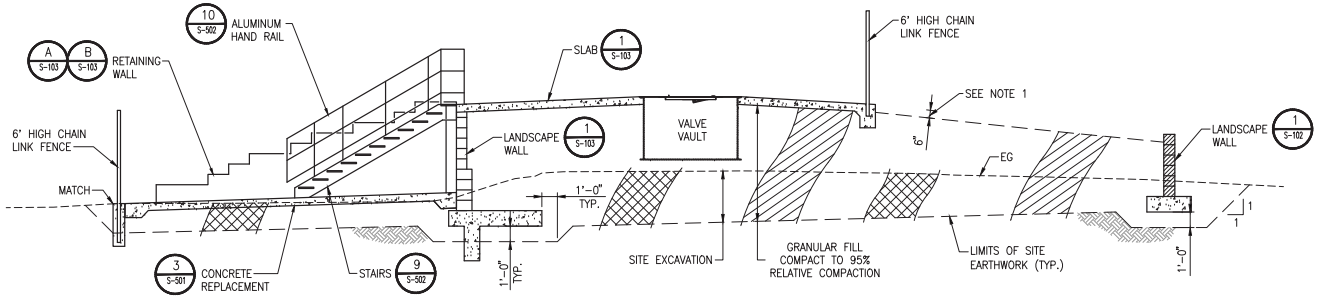

SECTION B
SCALE: 1" = 4'-0"

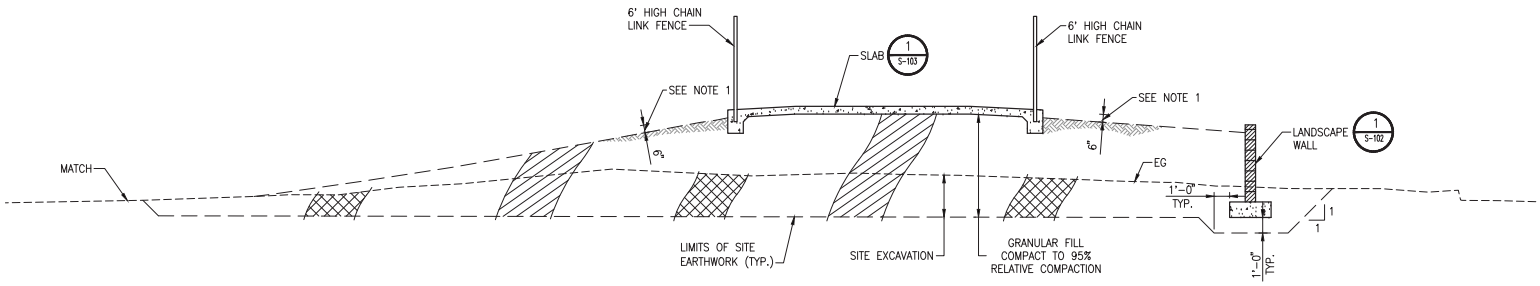

SECTION C
SCALE: 1" = 4'-0"

NOTE:

1. BARE EARTH LANDSCAPING AND IRRIGATION TO BE DONE BY OTHERS.

LEGEND

GRANULAR FILL COMPACTED TO 95% RELATIVE COMPACTION

SITE EXCAVATION

811 Know what's **below.** Call before you dig.

CITY OF SAN LUIS OBISPO

PROJECT TITLE: **CALLE JOAQUIN LIFT STATION REPLACEMENT**

SHEET TITLE: CALLE JOAQUIN LIFT STATION - GRADING SECTIONS AND DETAILS

REGISTERED PROFESSIONAL ENGINEER DANIEL S. CROSSLEY No. 73077 CIVIL STATE OF CALIFORNIA

DESIGNED BY:	DC
DRAWN BY:	NR
CHECKED BY:	-
APPROVED BY:	-
SCALE:	SEE DWG
DATE:	OCTOBER 2020
CITY SPECIFICATION NO.	91133
DRAWING NO.	C-205
SHEET NO.	15 of 56

DWG: \\USSWFIPPSPWO1\Data\Work\city of san luis obispo\60225711 - calle joaquin lift station\WO_cost_sph\02-sheets\SHT-C-205.dwg USER: GHiorbacc3D
DATE: Dec 07, 2020 3:53pm XREFS: REF-C-BS, CALLE JOAQUIN 2020 IMAGES: SLO emblem_bmp, mapl_sc.tif

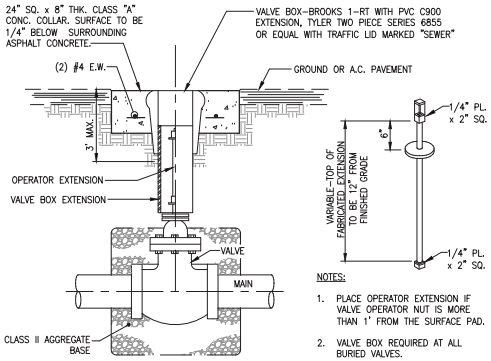

NOTE:
GATE VALVE ILLUSTRATED, ALSO TYPICAL FOR BUTTERFLY VALVE

NOTES:

1. PLACE OPERATOR EXTENSION IF VALVE OPERATOR NUT IS MORE THAN 1' FROM THE SURFACE PAD.
2. VALVE BOX REQUIRED AT ALL BURIED VALVES.

VALVE BOX DETAIL (1)
NOT TO SCALE

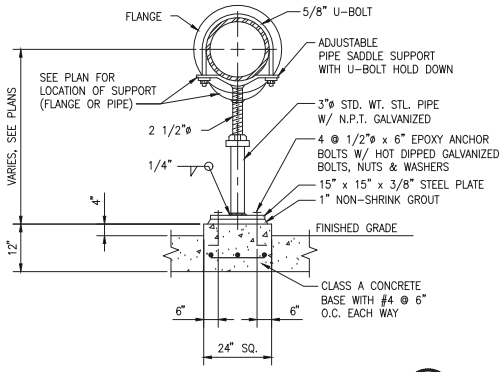

PIPE SUPPORT (2)
NOT TO SCALE

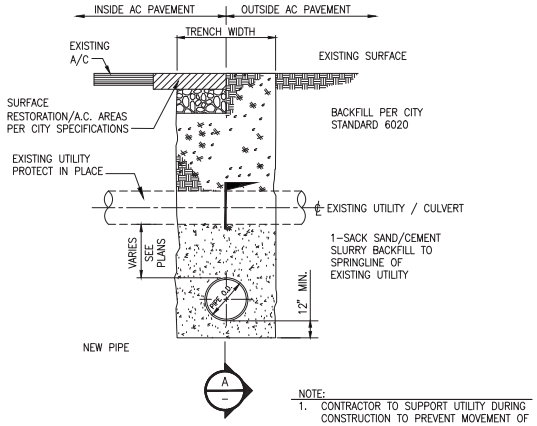

NOTE:
1. CONTRACTOR TO SUPPORT UTILITY DURING CONSTRUCTION TO PREVENT MOVEMENT OF THE EXISTING UTILITY. DO NOT ALTER THE LINE OR GRADE OF THE EXISTING UTILITY.
2. SEE SPECIFICATION SECTION 020120.

TYPICAL UTILITY CROSSING (3)
NOT TO SCALE

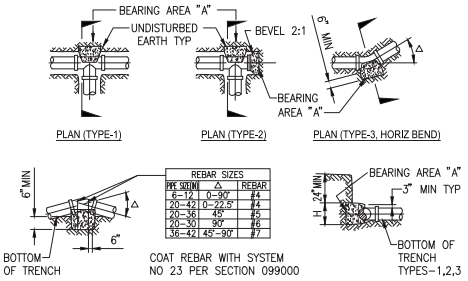

REBAR SIZES		
PIPE SIZE(IN)	Δ	REBAR
6–12	0–90°	#4
20–42	0–22.5°	#4
20–36	45°	#5
20–30	90°	#6
36–42	45°–90°	#7

NOTES:

1. BASED ON OD OF PIPE AT GASKET
2. CHECK SIZE OF FITTING TO VERIFY AVAILABLE AREA FOR BEARING ON CONCRETE
3. DO NOT USE THIS DETAIL WITH VERTICAL THRUST BLOCKS FOR PIPE SIZES AND BENDS NOT SHOWN IN THE TABLES
4. TEST PRESS = 150 PSI
   SOIL BRG PRESS = 1500 LB/SF
5. CONCRETE FOR THRUST BLOCKS SHALL BE CLASS A PER SPECIFICATION SECTION 030500

PIPE	BEARING AREA "A" (SF)					VERTICAL THRUST BLOCK VOL. OF CONCRETE (CY)			
DIA (IN)	TEE OR DEAD–END	Δ=11.25°	Δ=22.5°	Δ=45°	Δ=90°	Δ=11.25°	Δ=22.5°	Δ=45°	Δ=90°
6	3.8	1.1	1.5	2.9	5.3	0.3	0.5	1.1	2.0
8	6.5	1.3	2.5	5.0	9.2	0.5	0.9	1.8	3.4
10	10.8	2.1	4.2	8.2	15.2	0.8	1.6	3.0	5.6
12	15.2	3.0	5.9	11.6	21.5	1.1	2.2	4.3	7.9
14	20.6	4.0	8.0	15.8	29.1	1.5	3.0	5.8	10.8
16	26.9	5.3	10.5	20.6	38.0	2.0	3.9	7.6	14.1
18	34.3	6.7	13.4	26.3	48.5	2.5	5.0	9.7	—
20	42.6	8.4	16.6	32.6	60.3	3.1	6.2	12.1	—
24	61.6	12.1	24.0	47.1	87.1	4.5	8.9	—	—

TYPICAL THRUST BLOCKS (4)
NOT TO SCALE

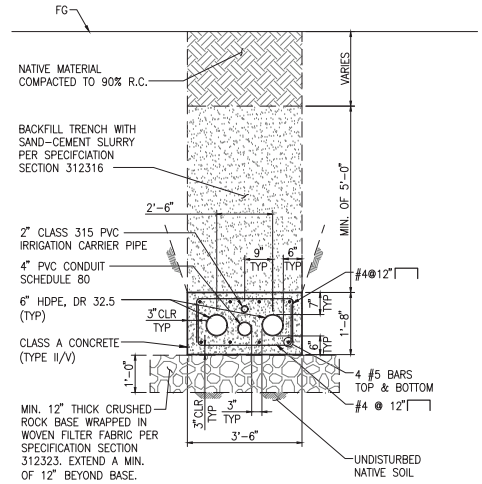

NOTE:
FOR CONTINUATION OF IRRIGATION CARRIER PIPE, SEE IRRIGATION PLAN.

ENCASED DOUBLE BARREL SIPHON SECTION (5)
NOT TO SCALE

NOTES:

1. THESE TYPICAL DETAILS SHOW THE MINIMUM REQUIREMENTS FOR SUPPORT OF EXISTING UTILITIES CROSSING THE PIPELINE TRENCH. ACTUAL REQUIREMENTS MAY VARY ALONG THE PIPELINE DEPENDING ON THE INDIVIDUAL UTILITY OWNER'S SUPPORT AND BACKFILL REQUIREMENTS.
2. SEE SPECIFICATION SECTION 020120.

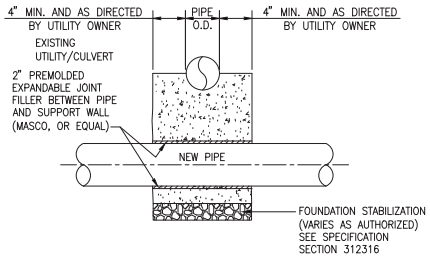

SECTION (A)
NOT TO SCALE

Know what's below. Call before you dig.

CITY OF SAN LUIS OBISPO

CALLE JOAQUIN LIFT STATION REPLACEMENT

CIVIL DETAILS - 1

PROJECT TITLE:

SHEET TITLE:

REGISTERED PROFESSIONAL ENGINEER — DANIEL S. CROSSLEY — No. 73077 — CIVIL — STATE OF CALIFORNIA

DESIGNED BY:	DC
DRAWN BY:	NR
CHECKED BY:	-
APPROVED BY:	-
SCALE:	SEE DWG
DATE:	OCTOBER 2020
CITY SPECIFICATION NO.	91133
DRAWING NO.	C-501
SHEET NO.	16 of 56

DWG: \\USSWFIPPSRWO1\Data\Work\city of san luis obispo\60225711 - calle joaquin lift station\WO_cad_gis\02-sheets\SHT-C-501.dwg USER: GAbrahacz0
DATE: Dec 07, 2020 3:53pm XREFS: REF-C-BB, CALLE JOAQUIN 2020 IMAGES: SLO emblem_bmp, mapl_sc.tif

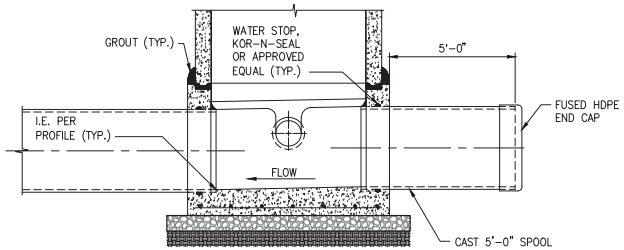

STUB AND CAP FOR FUTURE

NOT TO SCALE

1 / -

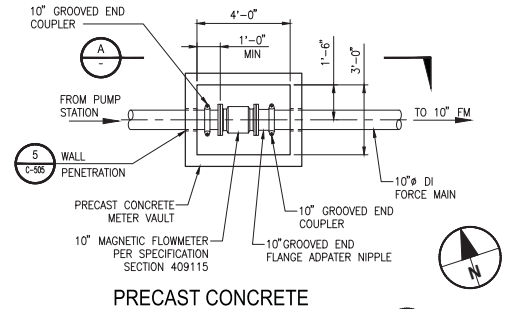

PRECAST CONCRETE METER VAULT

SCALE: 3/8" = 1'-0"

2 / -

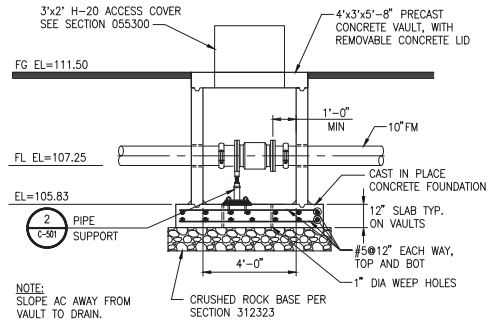

SECTION

SCALE: 3/8" = 1'-0"

A / -

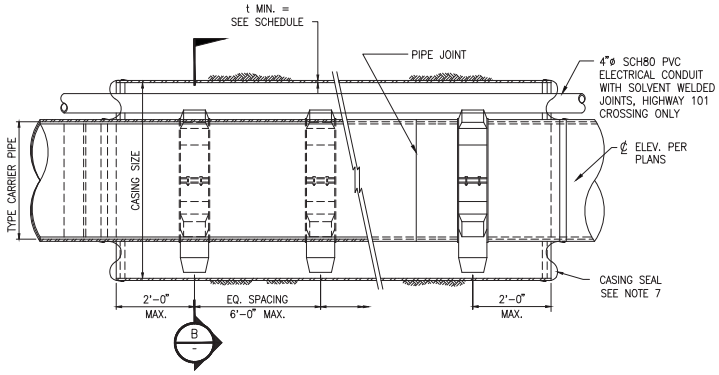

B / -

JACKED CASING DETAIL

NOT TO SCALE

3 / -

NOTES:

1. FOR LOCATIONS OF PIPE IN STEEL CASING SEE PLANS.
2. JACKED STEEL CASINGS SHALL BE IN CONFORMANCE WITH SPECIFICATION SECTION 317216 AND SHALL FOLLOW ADDITIONAL REQ'MTS. AND RECOMMENDATIONS IN GEOTECH REPORT PER THE APPLICABLE ENCROACHMENT PERMIT.
3. USE BENTONITE AS REQ'D TO REDUCE JACKING FORCE.
4. ALL CASING SECTIONS SHALL BE JOINED BY CONTINUOUS WELDING PROCESS.
5. FOR NUMBER AND SPACING OF CASING RUNNERS, SEE SPEC. SECTION 317216.
6. OMITTED
7. EACH END OF A CASING SHALL BE FITTED WITH AN END SEAL, INSTALLED AND SECURELY FASTENED WITH S.S. CLAMPS. THE END SEAL SHALL BE A MIN. 1/8" THICK NEOPRENE.

SCHEDULE – STEEL CASING FOR PIPE

LOCATION	BEGINNING STA.	ENDING STA.	MIN. CASING SIZE	MIN. WALL THICKNESS	TYPE CARRIER PIPE
HIGHWAY 101 CROSSING	STA. 1+94.83±	STA. 6+02.50±	30"	1/2"	12" HDPE

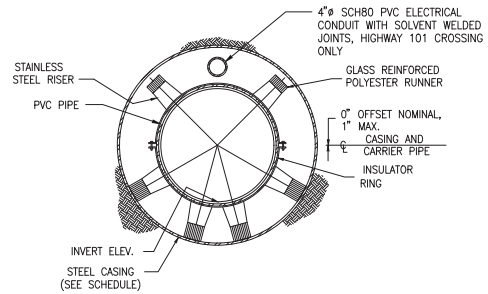

CASING SECTION

CASING SECTION

B / -

Know what's below. Call before you dig.

CITY OF OBISPO SAN LUIS

PROJECT TITLE: CALLE JOAQUIN LIFT STATION REPLACEMENT

SHEET TITLE: CIVIL DETAILS - 2

REGISTERED PROFESSIONAL ENGINEER DANIEL S. CROSSLIN No. 73077 CIVIL STATE OF CALIFORNIA

DESIGNED BY:	DC
DRAWN BY:	NR
CHECKED BY:	-
APPROVED BY:	-
SCALE:	SEE DWG
DATE:	OCTOBER 2020
CITY SPECIFICATION NO.	91133
DRAWING NO.	C-502
SHEET NO.	17 of 56

DWG: \\USSWFPPSPWO01\Data\Work\city of san luis obispo\60225711 - calle joaquin lift station\WO_cost_sph\02-sheets\SHT-C-502.dwg USER: GhBerbacoD
DATE: Dec 07, 2020 3:53pm XREFS: REF-C-BR, CALLE JOAQUIN 2020 IMAGES: SLO emblem_temp_mask_sc.tif

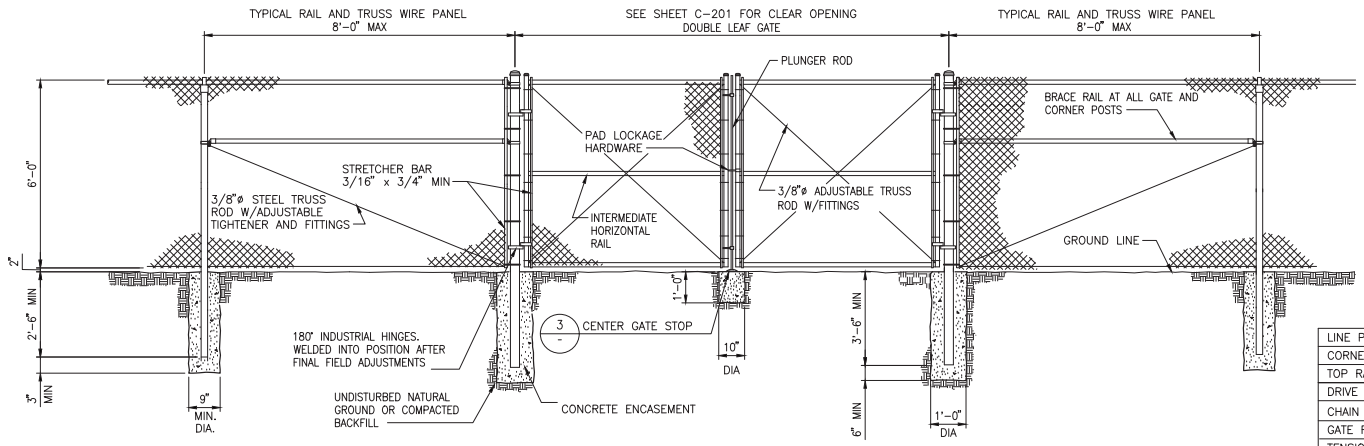

DOUBLE LEAF GATE DETAIL

NOT TO SCALE

1 -

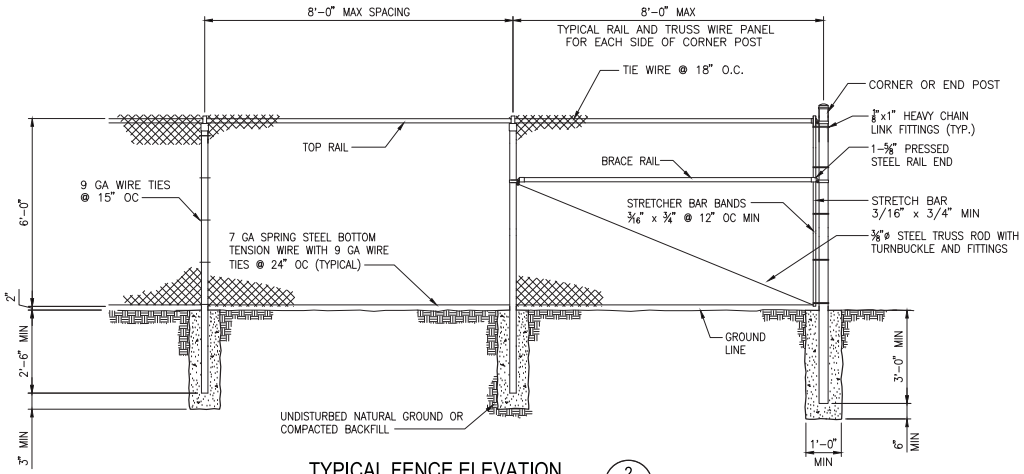

TYPICAL FENCE ELEVATION

SCALE: NTS

2 -

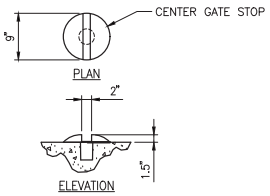

CENTER GATE STOP

SCALE: NTS

3 -

POST & MATERIALS TABLE

LINE POSTS	2-3/8" OD SCH 40 PIPE
CORNER & END POSTS	2-7/8" OD SCH 40 PIPE
TOP RAIL	1-5/8" OD SCH 40 PIPE
DRIVE GATE POSTS	4" OD SCH 40 PIPE
CHAIN LINK FABRIC	9 GA WIRE 2" DIAMOND WIRE, KNUCKLED TOP & BOTTOM
GATE FRAMES	1-7/8" OD SCH 40 PIPE
TENSION WIRE	7 GA GALV COIL SPRING STEEL
TRUSS RODS	3/8" GALV STEEL
BRACE RAIL	1-5/8" OD SCH 40 PIPE

NOTE:
1. FENCE TO BE 1' INSIDE PROPERTY LINE UNLESS NOTED OTHERWISE.
2. ADD SLATS PER SPECIFICATION SECTION 323112.
3. REFER TO STRUCTURAL PLANS FOR FENCE POST AND LAYOUT ON LIFT STATION SLAB (ALL POSTS = 3"ø EXTRA STRONG GALV. PIPE)

811 Know what's below. Call before you dig.

CITY OF PORTO SABIS SUM OBISPO

PROJECT TITLE: CALLE JOAQUIN LIFT STATION REPLACEMENT

SHEET TITLE: CIVIL DETAILS - 3

REGISTERED PROFESSIONAL ENGINEER DANIEL S. CROSSLEY No. 73077 CIVIL STATE OF CALIFORNIA

DESIGNED BY:	DC
DRAWN BY:	NR
CHECKED BY:	-
APPROVED BY:	-
SCALE:	SEE DWG
DATE:	OCTOBER 2020
CITY SPECIFICATION NO.	91133
DRAWING NO.	C-503
SHEET NO.	18 of 56

DWG: \\USBAKFIPPSPWO01\Data\Work\city of san luis obispo\60225711 - calle joaquin lift station\900_cad_gis\02-sheets\SHT-C-503.dwg USER: GhBenbacoD
DATE: Dec 07, 2020 3:55pm XREFS: REF-C-BB, CALLE JOAQUIN 2020 IMAGES: SLO emblem_bmp, mapl_sc.tif

NOTES:

1. NOT USED
2. ABANDON EXISTING SEWER MANHOLE AFTER NEW LIFT STATION IS IN OPERATION. REMOVE TOP 5'-0" OF MANHOLE AND BACKFILL WITH 2-SK SLURRY.
3. ABANDON EXIST. SEWER 3'-0" CLEAR FROM NEW SEWER AFTER NEW LIFT STATION IS IN OPERATION. BACKFILL ABANDONED SEWER WITH 2-SK SLURRY AND PLUG ENDS.
4. NEW 6' DIAMETER SEWER MANHOLE PER ENGINEERING STANDARD 6610.

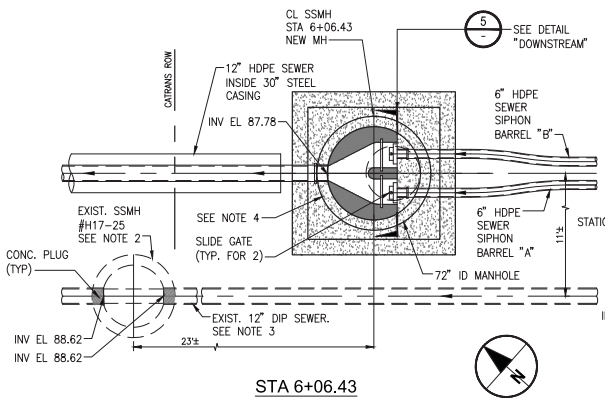

STA 6+06.43

DETAIL 1
SCALE: 1/4" = 1'-0"

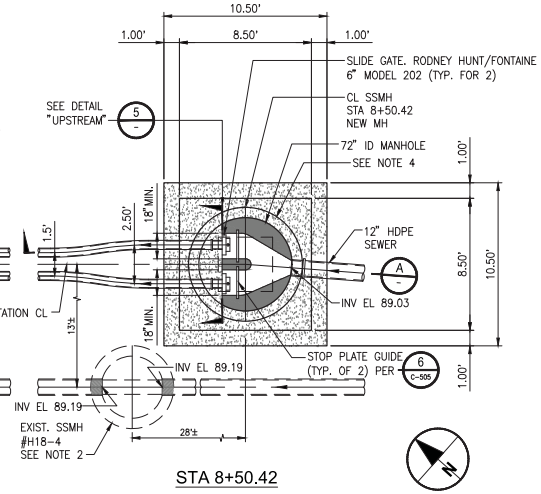

STA 8+50.42

DETAIL 2
SCALE: 1/4" = 1'-0"

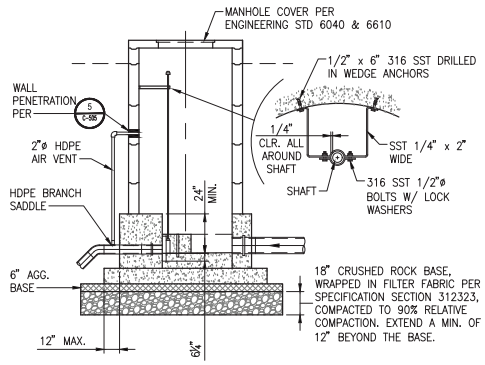

SECTION A
SCALE: 1/4" = 1'-0"

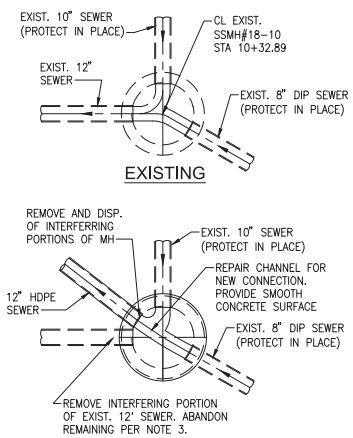

DETAIL 3
SCALE: 1/4" = 1'-0"

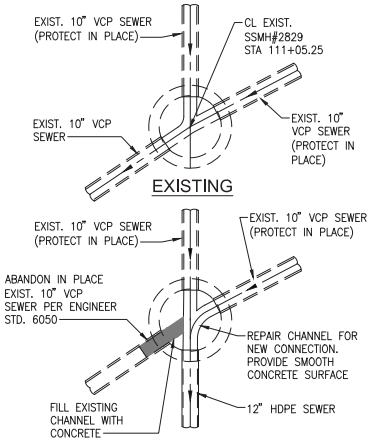

DETAIL 4
SCALE: 1/4" = 1'-0"

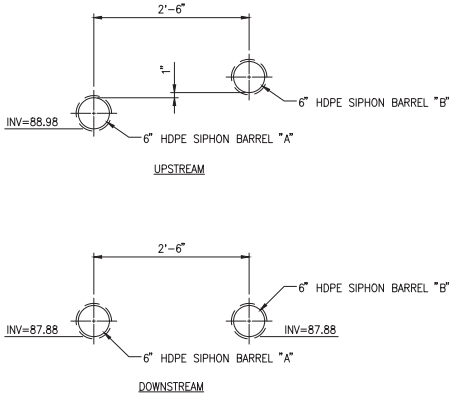

DETAIL 5
SCALE: 1" = 1'-0"

811 Know what's below. Call before you dig.

CITY OF SAN LUIS OBISPO

PROJECT TITLE: CALLE JOAQUIN LIFT STATION REPLACEMENT

SHEET TITLE: CIVIL DETAILS - 4

REGISTERED PROFESSIONAL ENGINEER DANIEL S. CROSSLEY No. 73077 CIVIL STATE OF CALIFORNIA

DESIGNED BY:	DC
DRAWN BY:	NR
CHECKED BY:	
APPROVED BY:	
SCALE:	SEE DWG
DATE:	OCTOBER 2020
CITY SPECIFICATION NO.	91133
DRAWING NO.	C-504
SHEET NO.	19 of 56

DWG: \\USSWFPPSRWO01\Data\Work\city of san luis obispo\60225711 - calle joaquin lift station\WO_cost_sph\02-sheets\SHT-C-504.dwg USER: GhBerbscd0
DATE: Dec 07, 2020 3:53pm XREFS: REF-C-BR CALLE JOAQUIN 2020 IMAGES: SLO emblem_bmp mad_sc.tif

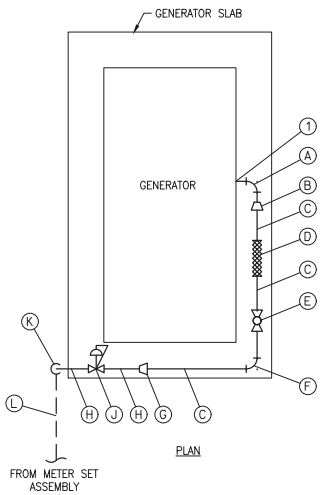

NOTES:

1. CONNECTION TO GENERATOR PER INLET LOCATION

MATERIAL LIST:

- (A) STEEL PIPE SIZE TO MATCH GENERATOR INLET PER S401458
- (B) 2" REDUCER
- (C) 2" STEEL PIPE PER S401458
- (D) STAINLESS STEEL FLEXIBLE FUEL LINE
- (E) 2" BALL VALVE PER S401458
- (F) 2" STEEL ELBOW PER S401458
- (G) 2"x1" STEEL REDUCER PER S401458
- (H) 1" STEEL PIPE PER S401458
- (J) 1" PRESSURE REGULATOR
- (K) 1" 90° STEEL ELBOW PER S401458
- (L) 1" PE PIPE PER S401449
- (M) 1" 90° PE ELBOW PER S401449
- (N) DOUBLE WRAP 20 MIL TAPE

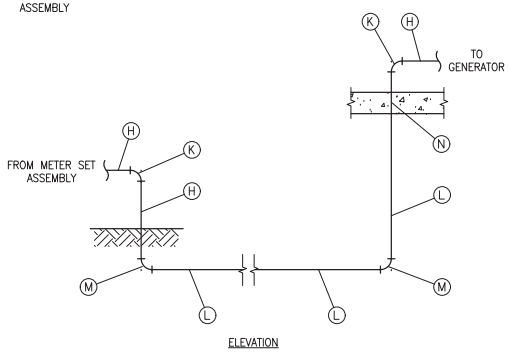

GENERATOR NATURAL GAS CONNECTION (1)

NOT TO SCALE

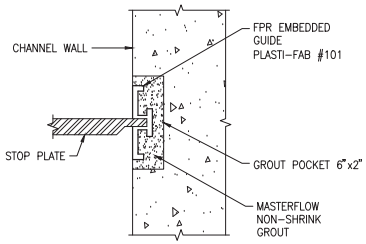

STOP PLATE GUIDE (6)

NOT TO SCALE

NOTES:

1. COUPLER TO BE ISCO ISMFJ1017IPSBELL OR APPROVED EQUALS.

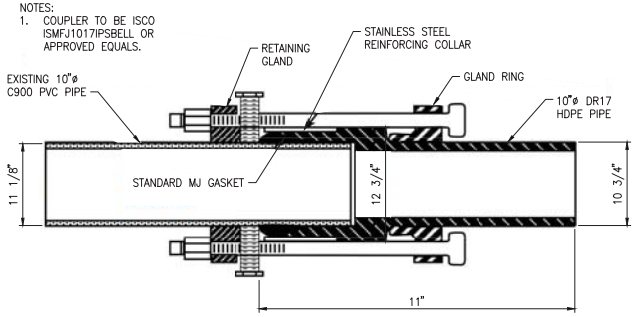

10" RESTRAINED TRANSITION COUPLER (2)

NOT TO SCALE

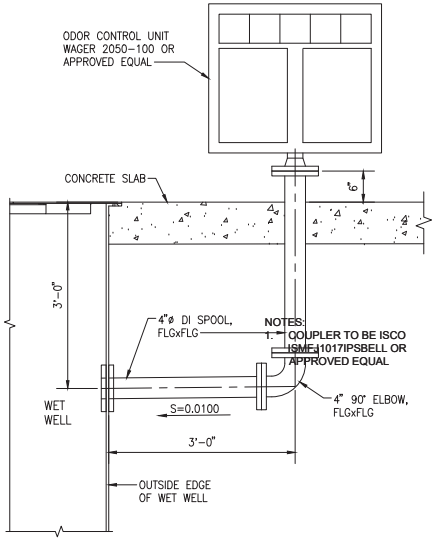

ODOR CONTROL UNIT DETAIL (3)

NOT TO SCALE

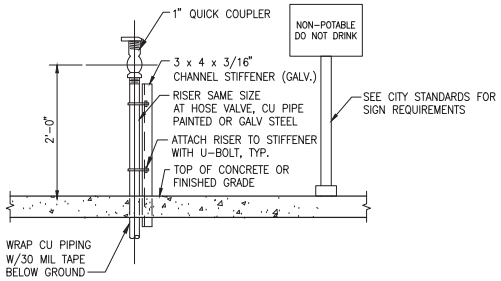

TYPICAL QUICK COUPLER DETAIL (4)

NOT TO SCALE

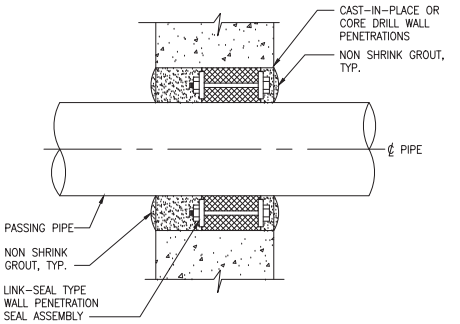

TYPICAL WALL PENETRATION (5)

NOT TO SCALE

811 Know what's below. Call before you dig.

CITY OF SAN LUIS OBISPO

CALLE JOAQUIN LIFT STATION REPLACEMENT

PROJECT TITLE:

CIVIL DETAILS - 5

SHEET TITLE:

REGISTERED PROFESSIONAL ENGINEER DANIEL S. CROSSLEY No. 73077 CIVIL STATE OF CALIFORNIA

DESIGNED BY:	DC
DRAWN BY:	NR
CHECKED BY:	
APPROVED BY:	
SCALE:	SEE DWG
DATE:	OCTOBER 2020
CITY SPECIFICATION NO.	91133
DRAWING NO.	C-505
SHEET NO.	20 of 56

DWG: \\USSWFIPPSPWO01\Data\Work\city of san luis obispo\60225711 - calle joaquin lift station\WO_cost_gph\02-sheets\SHT-C-505.dwg USER: GhBerdacc0
DATE: Dec 07, 2020 3:54pm XREFS: REF-C-BB, CALLE JOAQUIN 2020 IMAGES: SLO emblem_bmp_mad_sc.tif

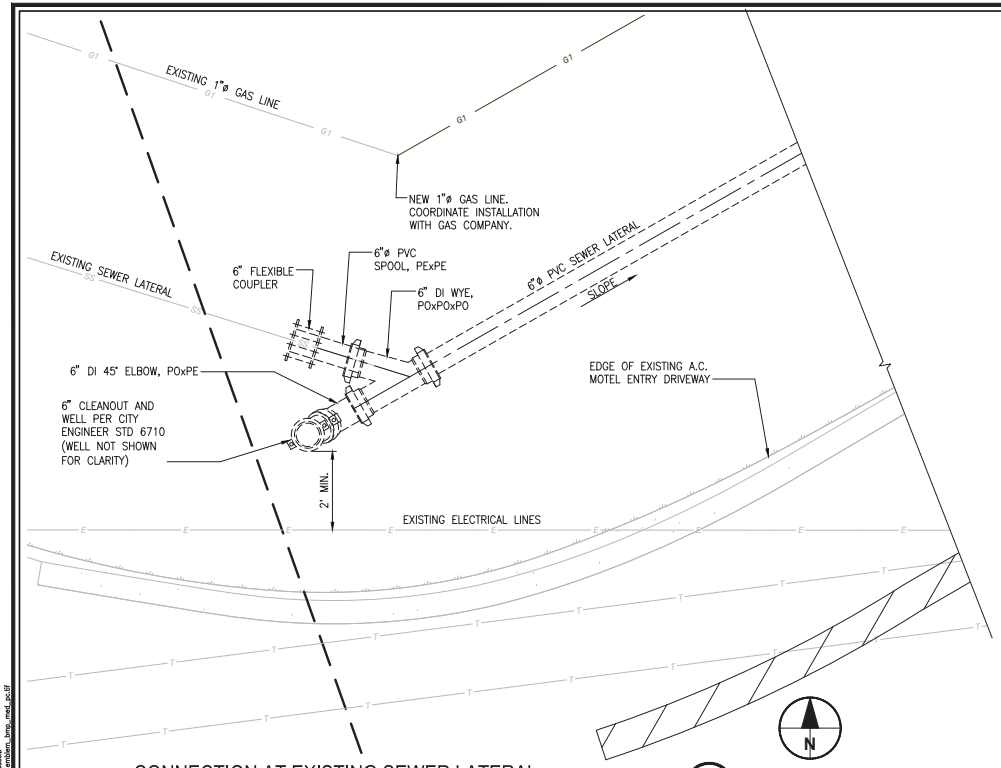

CONNECTION AT EXISTING SEWER LATERAL (1)

SCALE: 3/4" = 1'-0"

NOTES:

1. SEE SHEET G-003 FOR GENERAL NOTES.
2. LINE AND COAT ALL DUCTILE IRON PIPE AND FITTINGS PER SPECIFICATION SECTION 099761.

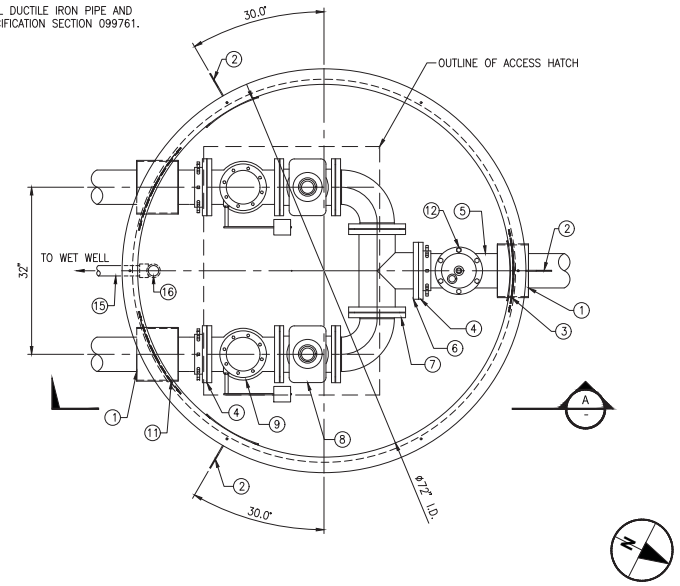

VALVE VAULT (2)

SCALE: 1" = 1'-0"

MATERIALS LIST

ITEM	DESCRIPTION
1	LS-400-S316 S/s LINKSEALS WITH NON-SHRINK GROUT
2	STAINLESS STEEL LIFTING LUG
3	10" SS SLEEVE
4	6" UNIFLANGE
5	6" DUCTILE IRON PIPE
6	6" FLANGED DUCTILE IRON TEE
7	6" FLANGED DUCTILE IRON ELBOW
8	6" CI FLANGED PLUG VALVE - DEZURIK
9	6" LEVER & WEIGHT CHECK VALVE - FLOWMATIC
10	72"x48" FIBERGLASS BASIN, W/FG ANTI-FLOAT
11	10" STAINLESS STEEL SLEEVE
12	2" WASTEWATER COMBINATION AIR VALVE BY ARI #D-020
13	SS BOLTS, WASHERS & LOCK NUTS (TYP.)
14	3/16"x6" RUBBER RING GASKET (TYP.)
15	2" PVC DRAIN PIPE
16	2" PVC DRAIN W/ THREADED LOCKNUT AND GASKET
17	2" SS BALL VALVE, TYPE 320
18	1" SS BALL VALVE, TYPE 320
19	PIPE SUPPORT

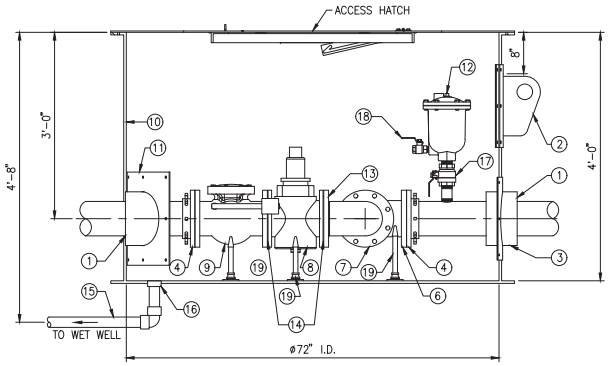

VALVE VAULT SECTION (A)

SCALE: 1" = 1'-0"

811 Know what's below. Call before you dig.

CITY OF SAN LUIS OBISPO

CALLE JOAQUIN LIFT STATION REPLACEMENT

CIVIL DETAILS - 6

PROJECT TITLE:

SHEET TITLE:

REGISTERED PROFESSIONAL ENGINEER DANIEL S. CROSSLEY No. 73077 CIVIL STATE OF CALIFORNIA

DESIGNED BY:	DC
DRAWN BY:	NR
CHECKED BY:	
APPROVED BY:	
SCALE:	SEE DWG
DATE:	OCTOBER 2020
CITY SPECIFICATION NO.	91133
DRAWING NO.	C-506
SHEET NO.	21 of 56

DWG: \\USSWFIPPSPWO01\Data\Work\city of san luis obispo\60225711 - calle joaquin lift station\900_cad_gis\02-sheets\SHT-C-506.dwg USER: GhBerdacc0
DATE: Dec 07, 2020 3:54pm XREFS: REF-C-TP REF-C-SP REF-C-LP REF-C-IP REF-2-BS CALLE JOAQUIN 2020 IMAGES: S10 emblem_temp_mead_pc.tif

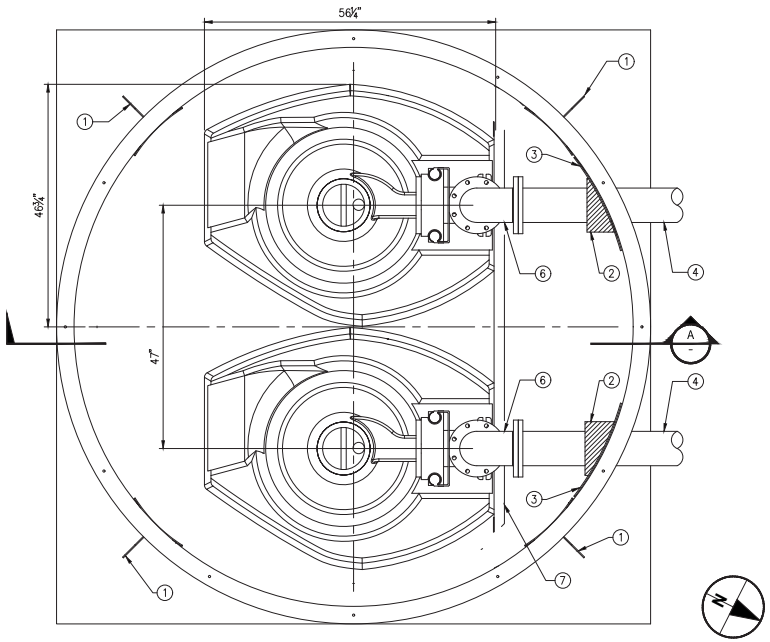

WET WELL
SCALE: 1" = 1'-0"
1
-

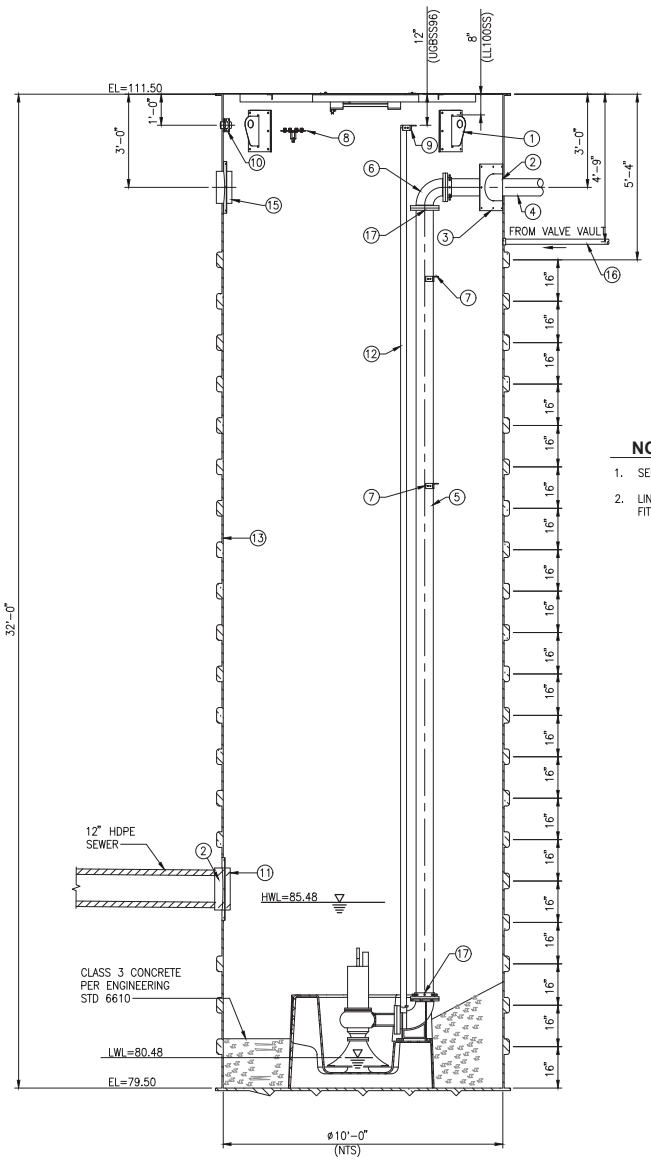

WET WELL SECTION
SCALE: 1/2" = 1'-0"
A
-

MATERIALS LIST

ITEM	DESCRIPTION
1	STAINLESS STEEL LIFTING RING
2	LS-400-S316 S/s LINKSEALS
3	10" STAINLESS STEEL SLEEVE FOR 120" BASIN
4	6"ø DUCTILE IRON PIPE
5	6"ø 316 STAINLESS STEEL PIPE, FLGxFLG
6	6" FLANGED DUCTILE IRON ELBOW
7	STAINLESS STEEL SHIPPING BRACE FOR 96" BASIN
8	316 STAINLESS STEEL OPEN EYE BOLT PER (1 / E-106)
9	UPPER STAINLESS STEEL GUIDERAIL BRACE
10	2" 316 STAINLESS STEEL THREADED NPT COUPLING – ELECTRICAL
11	12" 316 STAINLESS STEEL BOLT ON SLEEVE
12	316 STAINLESS STEEL PUMP RAIL PER PUMP MFR.
13	120"x 384" FIBERGLASS BASIN W/STL ANTI-FLOAT
14	OMITTED
15	4" 316 STAINLESS STEEL BOLT-ON SLEEVE
16	2" PVC DRAIN, CONNECT TO WET WELL WITH A THREADED LOCKNUT
17	FLANGE INSULATION KIT
18	6"ø 316 STAINLESS STEEL PIPE

NOTES:

1. SEE SHEET G-003 FOR GENERAL NOTES.
2. LINE AND COAT ALL DUCTILE IRON PIPE AND FITTINGS PER SPECIFICATION SECTION 099761.

811 Know what's below. Call before you dig.

CITY OF SAN LUIS OBISPO

PROJECT TITLE: CALLE JOAQUIN LIFT STATION REPLACEMENT

SHEET TITLE: CIVIL DETAILS - 7

REGISTERED PROFESSIONAL ENGINEER DANIEL S. CROSSLEY No. 73077 CIVIL STATE OF CALIFORNIA

DESIGNED BY:	DC
DRAWN BY:	NR
CHECKED BY:	
APPROVED BY:	
SCALE:	SEE DWG
DATE:	OCTOBER 2020
CITY SPECIFICATION NO.	91133
DRAWING NO.	C-507
SHEET NO.	22 of 56

DWG: \\USSWFPPSRWO01\data\Work\city of san luis obispo\60225711 - calle joaquin lift station\900 cad gdn\02-sheets\SHT-C-507.dwg USER: GHlombardo
DATE: Dec 07, 2020 3:54pm XREFS: REF-C-TP REF-C-SP REF-C-LP REF-C-BS CALLE JOAQUIN 2020 IMAGES: S10 emblem, bmp, mesh, jpc,tif

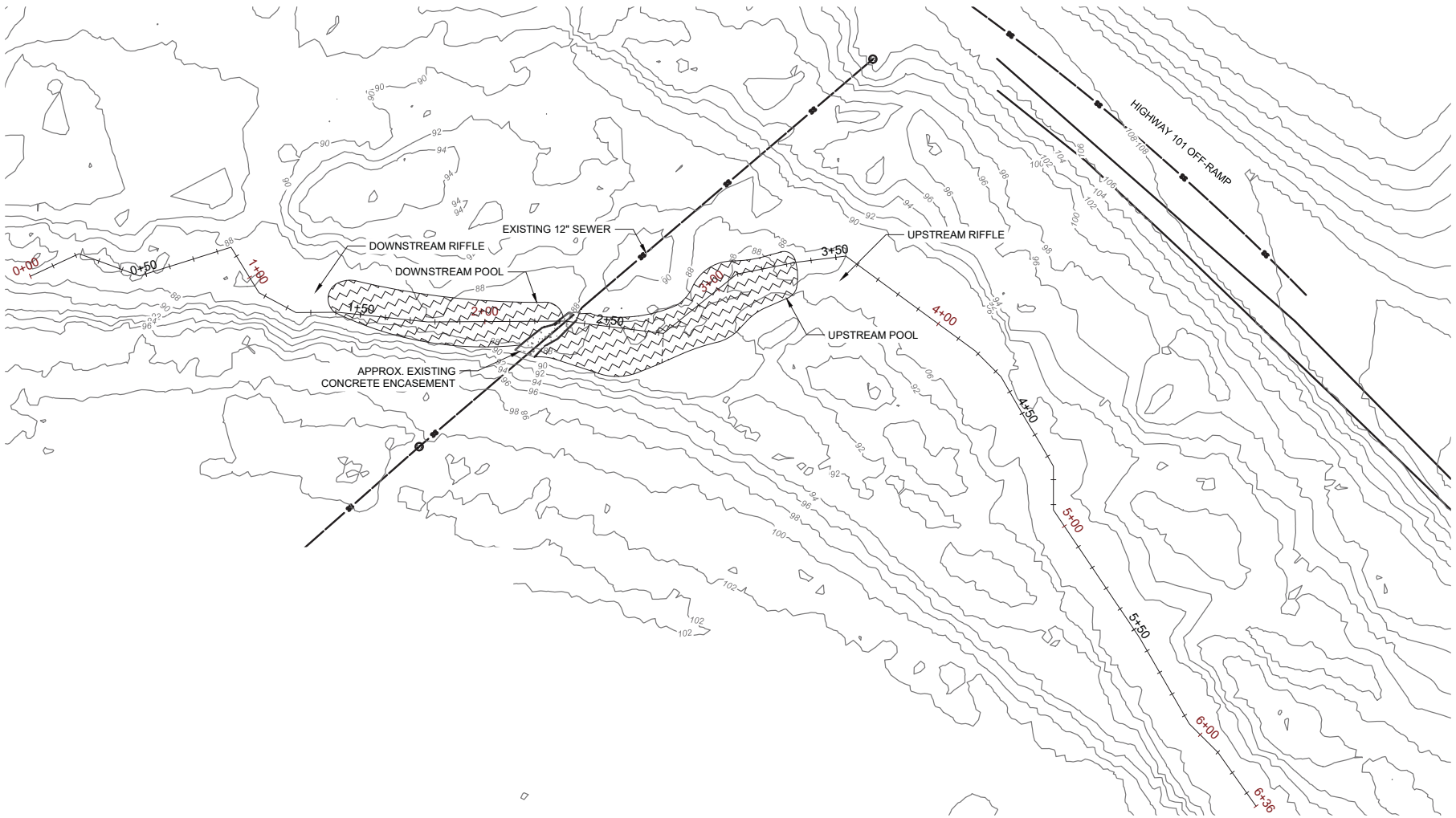

PLAN - EXISTING TOPOGRAPHY

SCALE 1"=10'-0"

N

SCALE

0 5 10 20

1 INCH = 10 FEET

CITY OF SAN LUIS OBISPO

PROJECT TITLE:

CALLE JOAQUIN LIFT STATION REPLACEMENT

SHEET TITLE:

EXISTING TOPOGRAPHY PLAN

REGISTERED PROFESSIONAL ENGINEER
STEVEN ALLEN MCKEEVER
No. 80567
Exp. 03-31-2021
CIVIL
STATE OF CALIFORNIA

DESIGNED BY:	OL
DRAWN BY:	GR
CHECKED BY:	SM
APPROVED BY:	-
SCALE:	1"=10'-0"
DATE:	OCTOBER 2020
CITY SPECIFICATION NO.	91133
DRAWING NO.	R-101
SHEET NO.	23 of 56

DWG: \\cabef\rtpool01\data\wrk\city of san luis obispo\60225711 - calle joaquin lift station\900_cad_gis\02-sheets\R-101.dwg USER: GRiffenbuscD
DATE: Dec 07, 2020 3:55pm XREFS: CWR TOPO REF-C-BD CALLE JOAQUIN 2020 10-19-2019 survey points 60225711-C-MOD-DESIGN IMAGES: SLO embdem_bmp_med_pc.tif

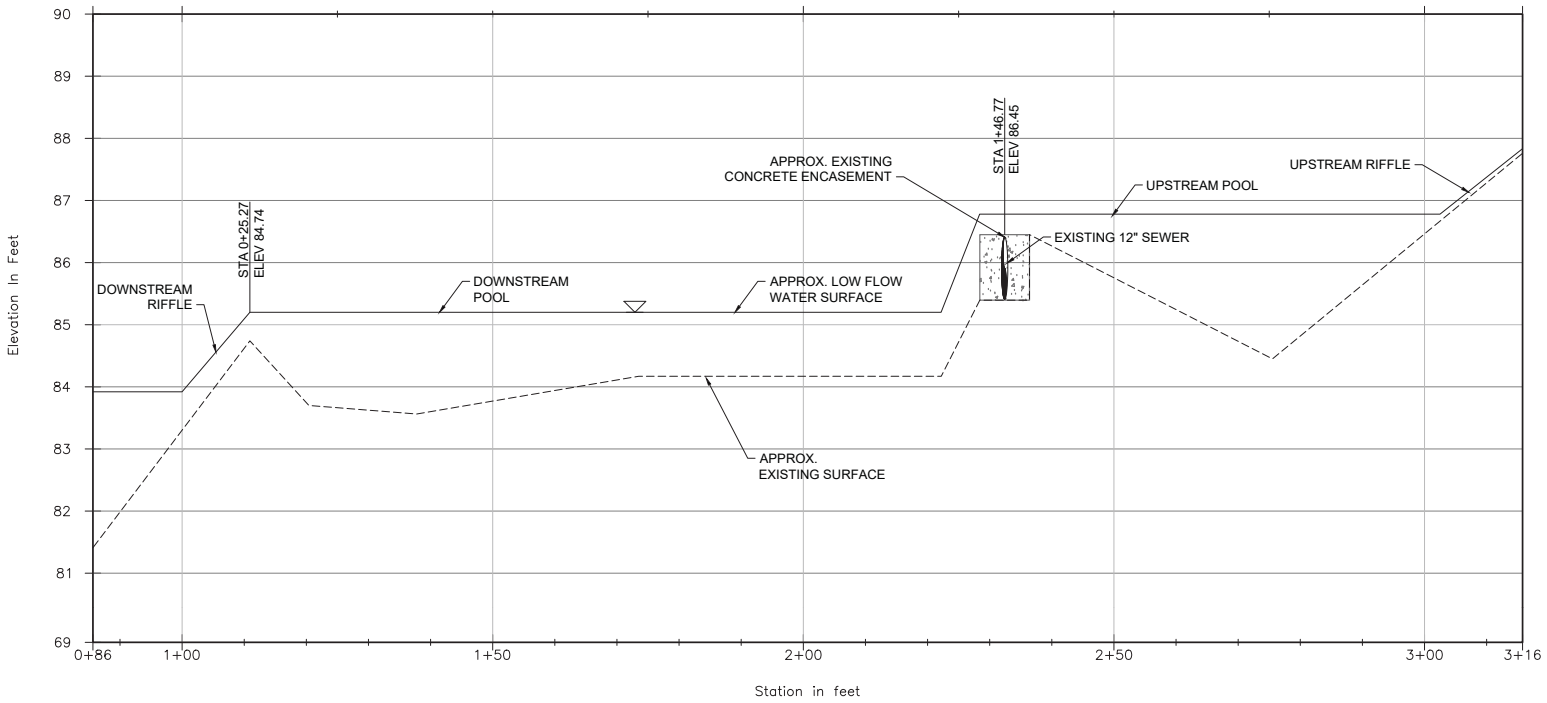

PROFILE - EXISTING

SCALE 1"=10'-0"

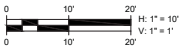

PROJECT TITLE:

CALLE JOAQUIN LIFT STATION REPLACEMENT

SHEET TITLE:

EXISTING TOPOGRAPHY PROFILE

REGISTERED PROFESSIONAL ENGINEER
STEVEN ALLEN MOKELEY
No. 80567
Exp. 03-31-2021
CIVIL
STATE OF CALIFORNIA

DESIGNED BY:	OL
DRAWN BY:	NR
CHECKED BY:	SM
APPROVED BY:	-
SCALE:	SEE DWG
DATE:	OCTOBER 2020
CITY SPECIFICATION NO.	91133
DRAWING NO.	R-102
SHEET NO.	24 of 56

DWG: \\usbsf1\tpsad01\data\wrk\city of san luis obispo\60225711 - calle joaquin lift station\900_cad_gis\02-wheels\R-102.dwg USER: OMorales@
DATE: Dec 07, 2020 3:55pm XREFS: REF-C-BR CALLE JOAQUIN 2020 60225711-C-MOD-DESIGN IMAGES: SJO embarm_bmp_med_pc.tif

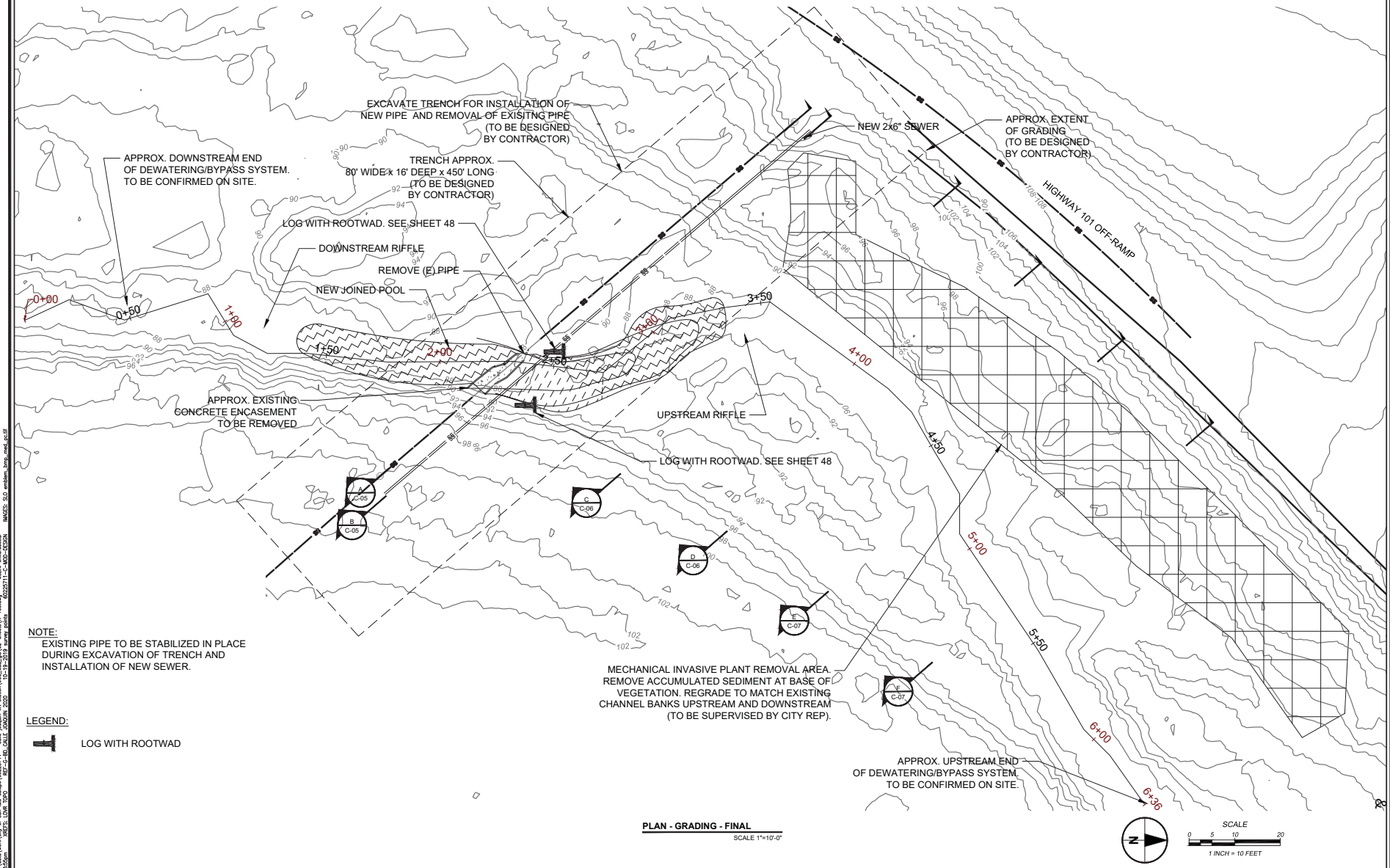

NOTE:
EXISTING PIPE TO BE STABILIZED IN PLACE DURING EXCAVATION OF TRENCH AND INSTALLATION OF NEW SEWER.

LEGEND:

LOG WITH ROOTWAD

PLAN - GRADING - FINAL
SCALE 1"=10'-0"

CITY OF SAN LUIS OBISPO

PROJECT TITLE: **CALLE JOAQUIN LIFT STATION REPLACEMENT**

SHEET TITLE: GRADING PLAN - FINAL

REGISTERED PROFESSIONAL ENGINEER
STEVEN ALLEN MCKEELY
No. 80567
Exp. 03-31-2021
CIVIL
STATE OF CALIFORNIA

DESIGNED BY:	OL
DRAWN BY:	NR
CHECKED BY:	SM
APPROVED BY:	-
SCALE:	1" = 10'-0"
DATE:	OCTOBER 2020
CITY SPECIFICATION NO.	91133
DRAWING NO.	R-103
SHEET NO.	25 of 56

DWG: \\calsdf1\cpsun01\data\wrk\city of san luis obispo\60225711 - calle joaquin lift station\900_cad_gis\02-sheets\R-103.dwg USER: OKlimczuk
DATE: Dec 07, 2020 3:55pm XREFS: CWR TOPO REF-C-BD CALLE JOAQUIN 2020 10-19-2019 survey points 60225711-C-MOD-DESIGN IMAGES: SLO_emblem_bmp_med_pc.tif

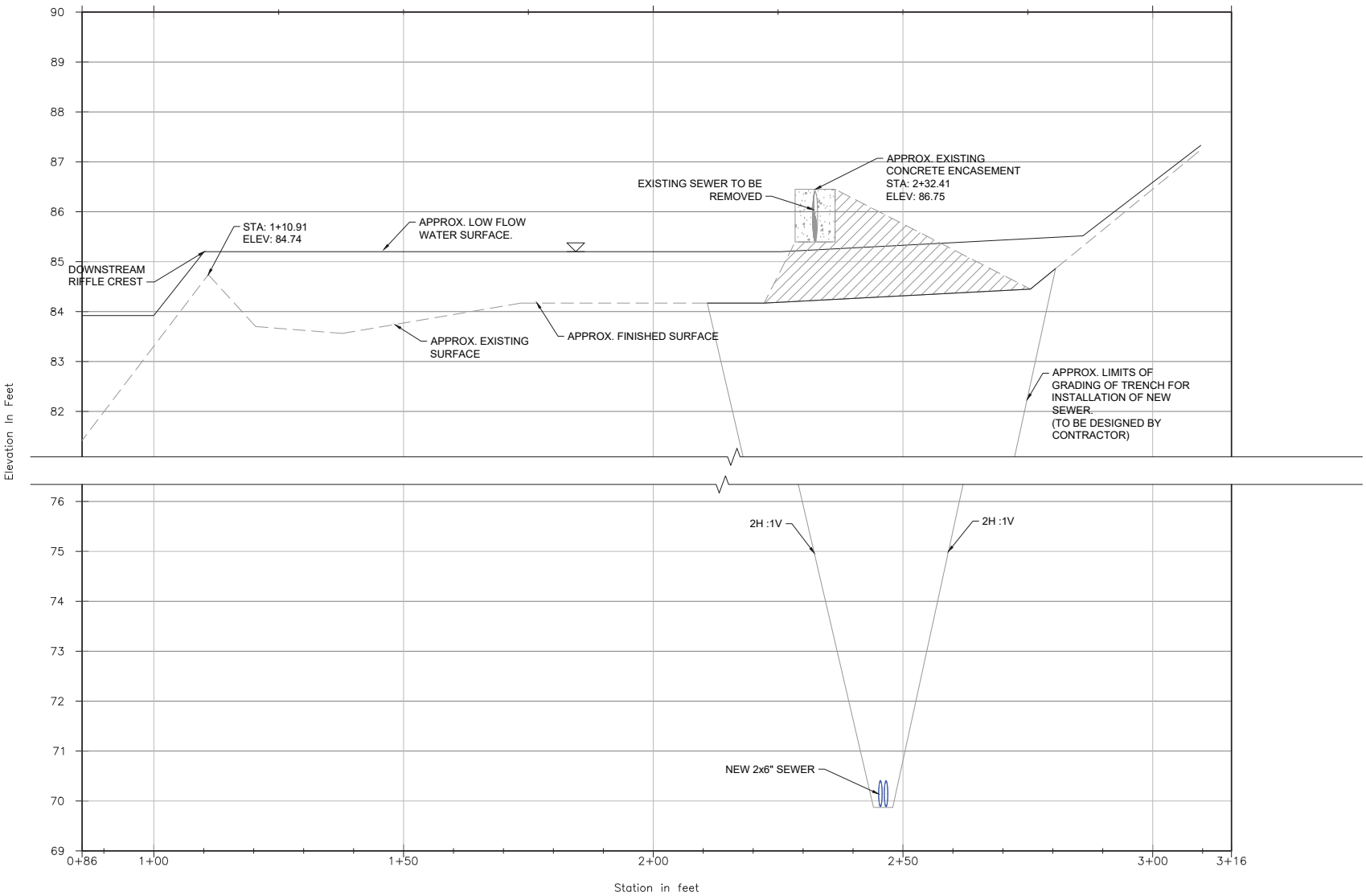

PROFILE - GRADING - FG

SCALE 1"=10'-0"

0 10' 20'
H: 1" = 10'
V: 1" = 1'
0 10' 20'

NOTE:
EXISTING PIPE TO BE STABILIZED IN PLACE DURING EXCAVATION OF TRENCH AND INSTALLATION OF NEW SEWER.

CITY OF SAN LUIS OBISPO

PROJECT TITLE:
CALLE JOAQUIN LIFT STATION REPLACEMENT

SHEET TITLE:
GRADING PROFILE

REGISTERED PROFESSIONAL ENGINEER
STEVEN ALLEN MCKELLY
No. 80567
Exp. 03-31-2021
CIVIL
STATE OF CALIFORNIA

DESIGNED BY:	OL
DRAWN BY:	NR
CHECKED BY:	SM
APPROVED BY:	-
SCALE:	SEE DWG
DATE:	OCTOBER 2020
CITY SPECIFICATION NO.	91133
DRAWING NO.	R-104
SHEET NO.	26 of 56

DWG: \\usbsf1\cpuad01\data\wrc\city of san luis obispo\60225711 - calle joaquin lift station\900_cad_gis\02-sheets\R-104.dwg USER: OMarquez
DATE: Dec 07, 2020 3:55pm XREFS: REF-C-BB; CALLE JOAQUIN 2020 IMAGES: SJO_emblem_bmp_med_pc.tif

NOTE:
EXISTING PIPE TO BE STABILIZED IN PLACE DURING EXCAVATION OF TRENCH AND INSTALLATION OF NEW SEWER.

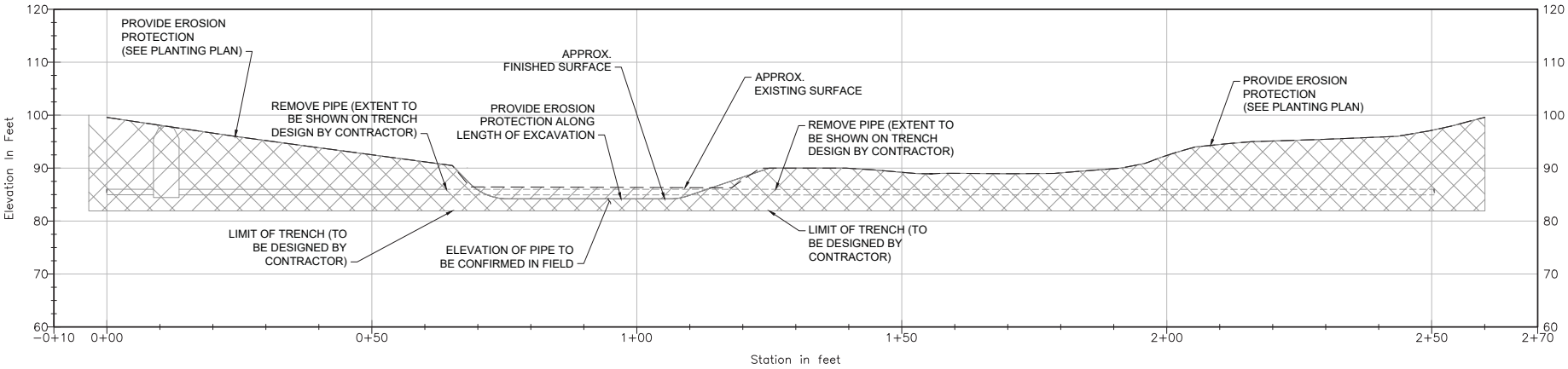

A | **CROSS SECTION VIEW STA 10+10 - FG**
SCALE 1"=10'-0"

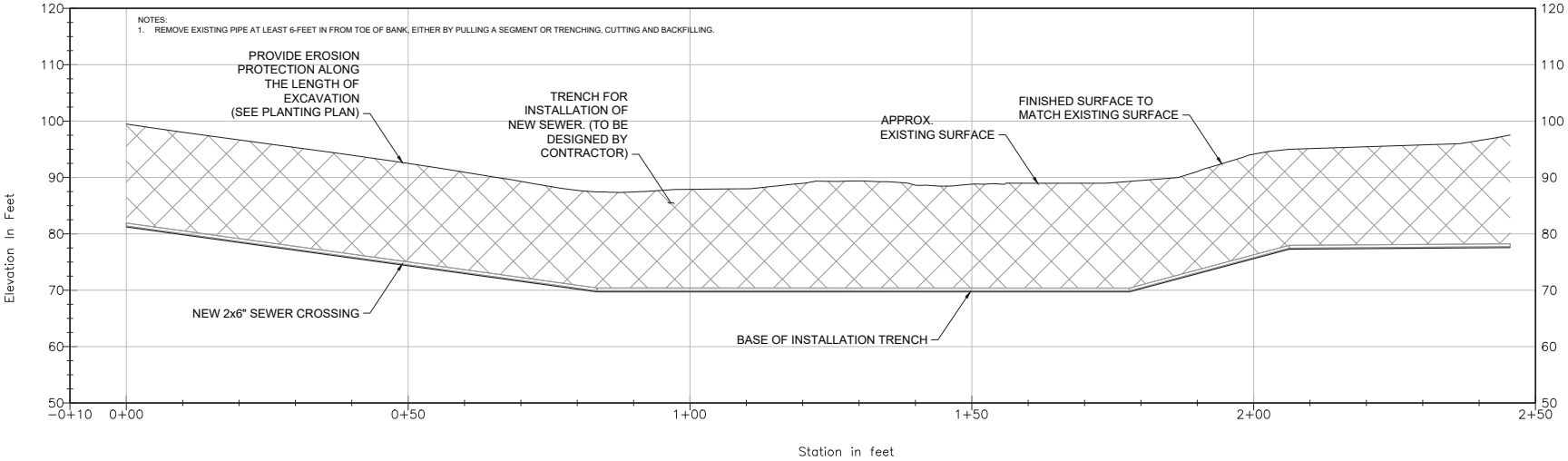

0 10' 20'
H: 1" = 10'
V: 1" = 1'
0 10' 20'

B | **CROSS SECTION VIEW STA 10+00 - FG**
SCALE 1"=10'-0"

PROJECT TITLE:
CALLE JOAQUIN LIFT STATION REPLACEMENT

SHEET TITLE:
GRADING CROSS SECTIONS - 1 OF 3

REGISTERED PROFESSIONAL ENGINEER
STEVEN ALLEN MCNEELY
No. 80567
Exp. 03-31-2021
CIVIL
STATE OF CALIFORNIA

DESIGNED BY:	OL
DRAWN BY:	NR
CHECKED BY:	SM
APPROVED BY:	-
SCALE:	SEE DWG
DATE:	OCTOBER 2020
CITY SPECIFICATION NO.	91133
DRAWING NO.	R-105
SHEET NO.	27 of 56

DWG: \\usbaf1rtpsad01\data\wrk\city of san luis obispo\60225711 - calle joaquin lift station\900_cad_gis\02-wheels\R-105.dwg USER: OlivarJuscD
DATE: Dec 07, 2020 3:55pm XREFS: REF-C-BR CALLE JOAQUIN 2020 IMAGES: SJO embarm_bmp_med_pc.tif

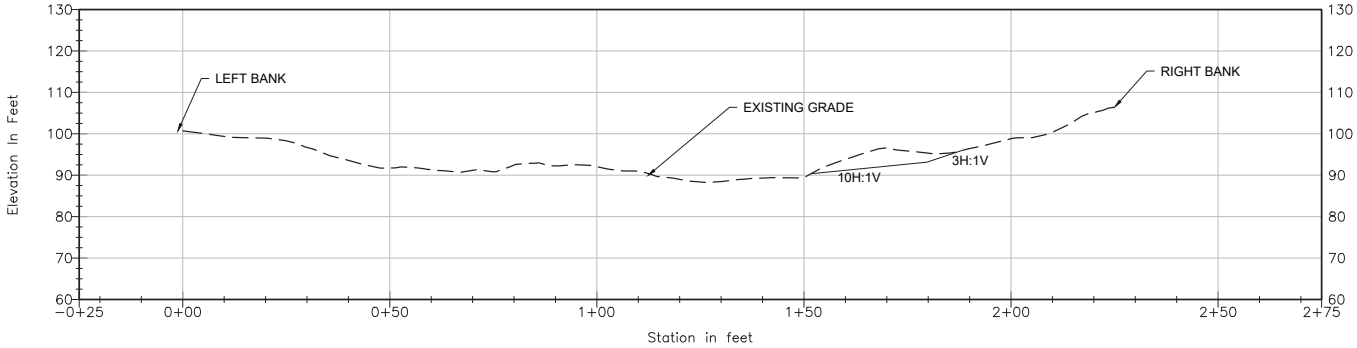

C | **CROSS SECTION VIEW STA 3+69 - FG**

SCALE: H 1"=15'-0"
V 1"=15'-0"

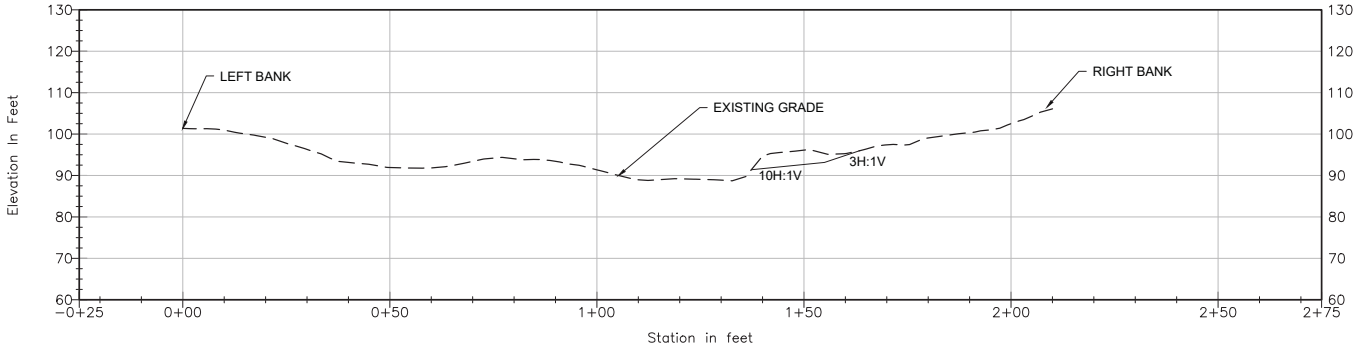

D | **CROSS SECTION VIEW STA 4+20 - FG**

SCALE: H 1"=15'-0"
V 1"=15'-0"

NOTES:
1. GRADING SLOPES ARE INDICATIVE TO SHOW REMOVAL OF ACCUMULATED SEDIMENT AT THE BASE OF INVASIVE VEGETATION (TO BE REMOVED). WHERE ACCUMULATED SEDIMENT IS FOUND WIHTIN THE VEGETATION CLEARING ZONE, GRADE BANKS AT A MAXIMUM SLOPE OF 3H:1V, MINIMUM SLOPE OF 10H:1V TO MATCH EXISTING BANK SLOPE UPSTREAM AND DOWNSTREAM. TO BE SUPERVISED BY CITY REP.

0 15' 30'
1" = 15'

CITY OF SAN LUIS OBISPO

PROJECT TITLE: **CALLE JOAQUIN LIFT STATION REPLACEMENT**

SHEET TITLE: GRADING CROSS SECTIONS - 2 OF 3

REGISTERED PROFESSIONAL ENGINEER
STEVEN ALLEN MCKELLY
No. 80567
Exp. 03-31-2021
CIVIL
STATE OF CALIFORNIA

DESIGNED BY:	OL
DRAWN BY:	NR
CHECKED BY:	SM
APPROVED BY:	-
SCALE:	1" = 10'-0"
DATE:	OCTOBER 2020
CITY SPECIFICATION NO.	91133
DRAWING NO.	R-106
SHEET NO.	28 of 56

DWG: \\usbsf1fpsan01\data\wwr\city of san luis obispo\60225711 - calle joaquin lift station\900_cad_gis\02-sheets\R-106.dwg USER: OAlonsoJD
DATE: Dec 07, 2020 3:56pm XREFS: CWR TOPO REF-2-BD CALLE JOAQUIN 2020 10-19-2019 survey points 60225711-C-MOD-DESIGN IMAGES: SLO emblem_bmp_med_pc.tif

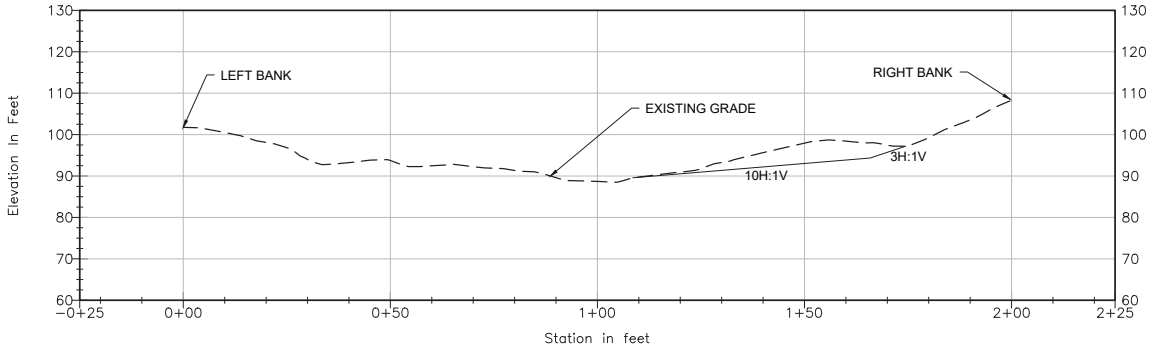

E | **CROSS SECTION VIEW STA 4+70 - FG**

SCALE: H 1"=15'-0"
V 1"=15'-0"

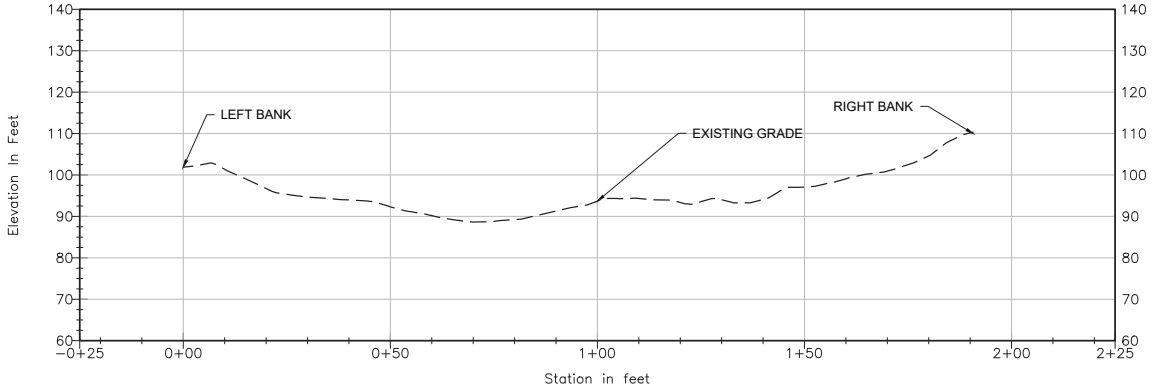

F | **CROSS SECTION VIEW STA 5+26 - FG**

SCALE 1"=30'-0"

NOTES:
1. GRADING SLOPES ARE INDICATIVE TO SHOW REMOVAL OF ACCUMULATED SEDIMENT AT THE BASE OF INVASIVE VEGETATION (TO BE REMOVED). WHERE ACCUMULATED SEDIMENT IS FOUND WIHTIN THE VEGETATION CLEARING ZONE, GRADE BANKS AT A MAXIMUM SLOPE OF 3H:1V, MINIMUM SLOPE OF 10H:1V TO MATCH EXISTING BANK SLOPE UPSTREAM AND DOWNSTREAM. TO BE SUPERVISED BY CITY REP.

0 15' 30'
1" = 15'

CITY OF SAN LUIS OBISPO

PROJECT TITLE:
CALLE JOAQUIN LIFT STATION REPLACEMENT

SHEET TITLE:
GRADING CROSS SECTIONS - 3 OF 3

REGISTERED PROFESSIONAL ENGINEER
STEVEN ALLEN MCKELLY
No. 80567
Exp. 03-31-2021
CIVIL
STATE OF CALIFORNIA

DESIGNED BY:	OL
DRAWN BY:	NR
CHECKED BY:	SM
APPROVED BY:	-
SCALE:	1" = 10'-0"
DATE:	OCTOBER 2020
CITY SPECIFICATION NO.	91133
DRAWING NO.	R-107
SHEET NO.	29 of 56

DWG: \\sabel\tdpaa001\data\wrk\city of san luis obispo\60225711 - calle joaquin lift station\900_cad_gis\02-wheels\R-107.dwg USER: OMorales3D
DATE: Dec 07, 2020 3:57pm XREFS: CMR TOPO REF-2-BD CALLE JOAQUIN 2020 10-19-2019 survey points 60225711-C-MOD-DESIGN IMAGES: SLO embdem_bmp_med_pc.tif

NOTES:

1. NATIVE TREES SHALL BE SALVAGED WITH THE ROOTWAD INTACT TO THE EXTENT POSSIBLE.
2. LIMB BRANCHES FROM ONE SIDE OF THE TREE SO THAT THS SIDE COMES INTO CLOSER CONTACT WITH THE STREAM BED. REMAINING BRANCHES AND FOLIAGE ARE NOT SHOWN FOR CLARITY, BUT MAY BE LEFT INTACT.
3. TREES WITH ROOTWADS WILL GENERALLY BE PLACED WITH THE ROOTWAD END IN THE UPSTREAM DIRECTION. FINAL POSITIONING OF TREES WITH ROOTWADS WILL BE DIRECTED BY THE CITY REPRESENTATIVE.
4. SEE TYPICAL ANCHORING DETAILS ON THIS SHEET FOR ANCHOR REQUIREMENTS REFER TO SPECIFICATION SECTION 02990 FOR THE DETAILS OF THESE REQUIREMENTS.
5. INSTALL DUCKBILL ANCHORS PER MANUFACTURERS SPECIFICATIONS. INSTALL A MINIMUM OF 2 ANCHORS PER LOG. EACH ANCHOR SHALL BE LOAD LOCKED AND TESTED USING A MANTA LL-2 ANCHOR LOCKING KIT. TESTING AND REPORTING SHALL BE AS DESCRIBED IN SPECIFICATIONS SECTION 02990.

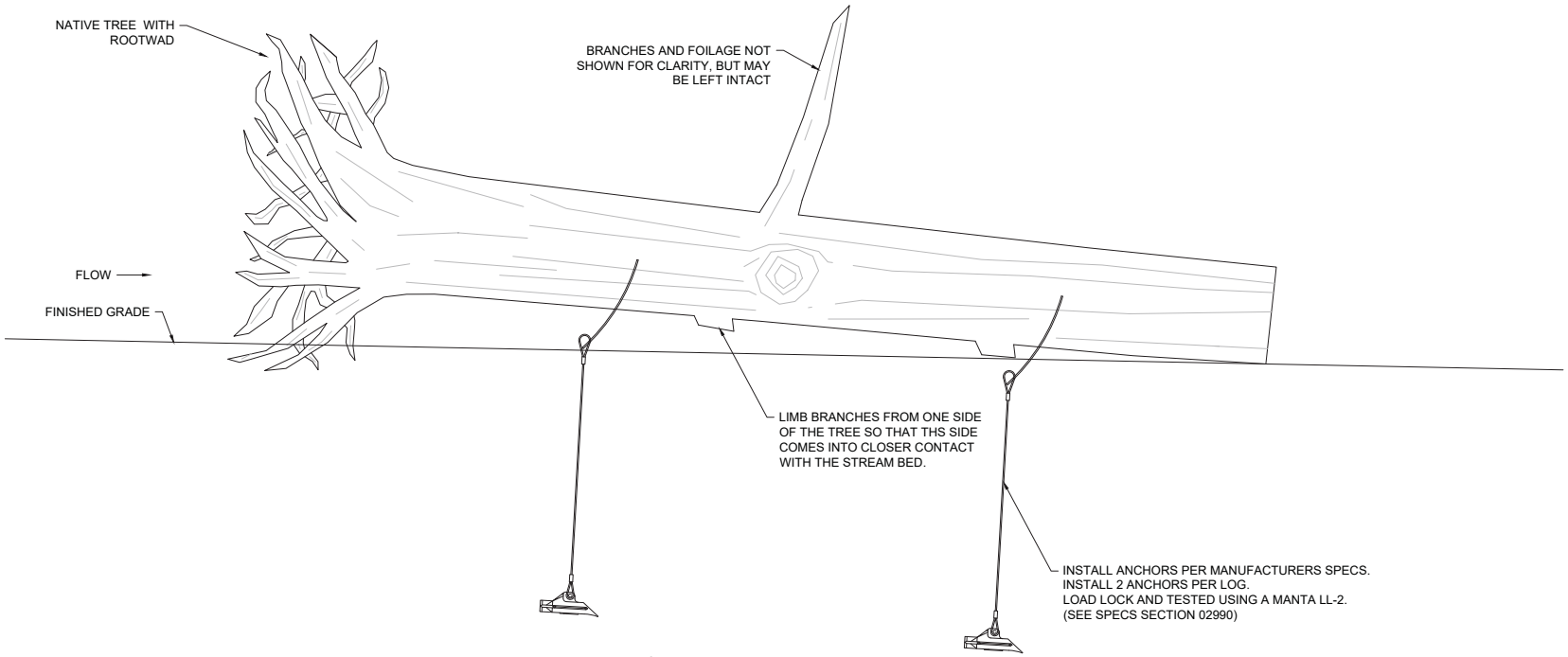

1 - **ROOTWAD DETAIL**

SCALE: NTS

CITY OF SAN LUIS OBISPO

PROJECT TITLE: **CALLE JOAQUIN LIFT STATION REPLACEMENT**

SHEET TITLE: DETAILS - ROOTWAD

REGISTERED PROFESSIONAL ENGINEER
STEVEN ALLEN MOKELY
No. 80567
Exp. 03-31-2021
CIVIL
STATE OF CALIFORNIA

DESIGNED BY:	OL
DRAWN BY:	NR
CHECKED BY:	SM
APPROVED BY:	-
SCALE:	-
DATE:	OCTOBER 2020
CITY SPECIFICATION NO.	91133
DRAWING NO.	R-108
SHEET NO.	30 of 56

DWG: \\sabef\drpool01\data\wrk\city of san luis obispo\60229711 - calle joaquin lift station\900_cad_gis\02-sheets\R-108.dwg USER: OHiller.sloc0
DATE: Dec 07, 2020 3:57pm XREFS: REF-C-BR: CALLE JOAQUIN 2020 10-19-2018 survey points IMAGES: S.O emtbem, bmp_medi_pc.tif

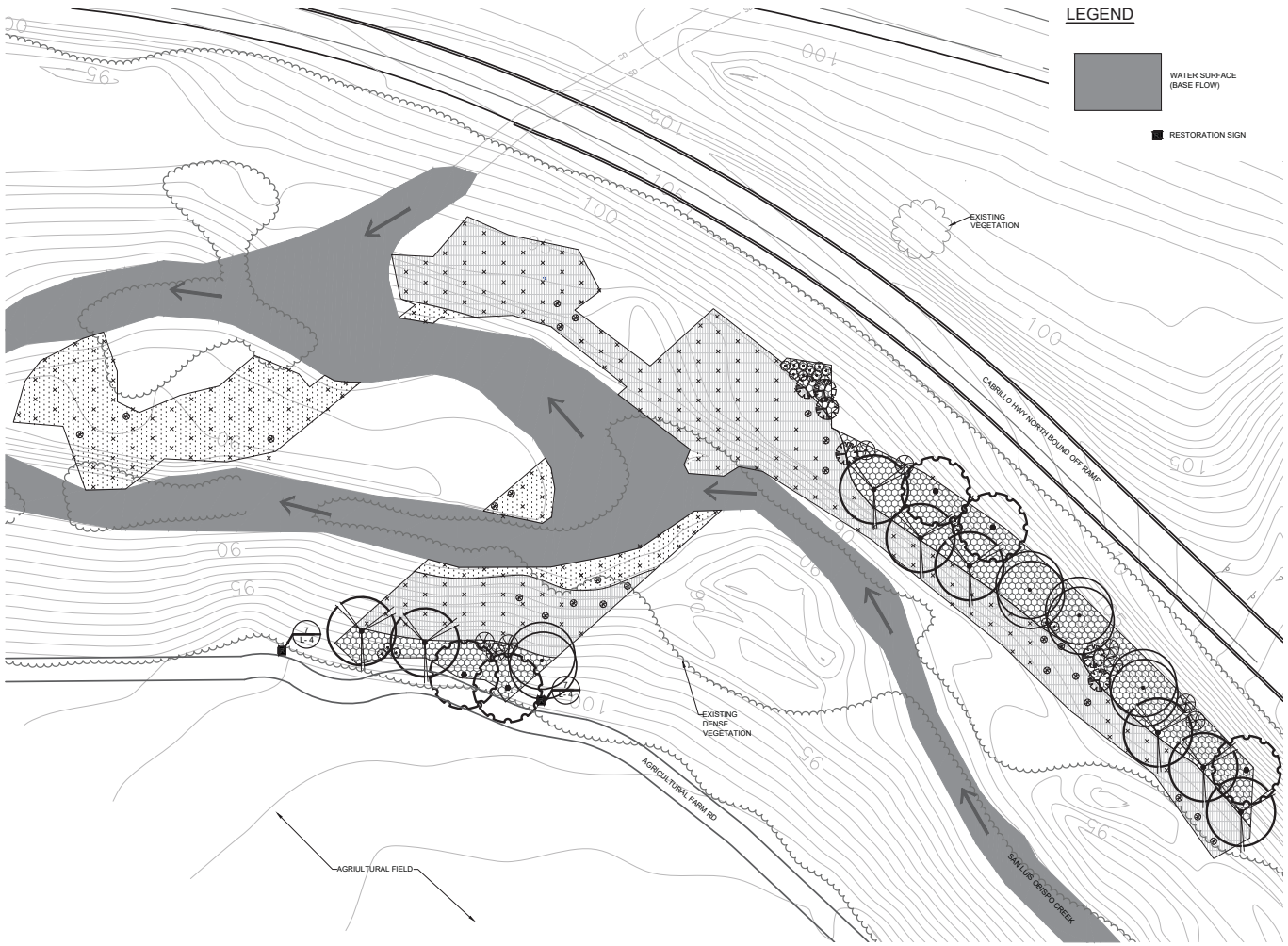

LEGEND

WATER SURFACE (BASE FLOW)

RESTORATION SIGN

PLANTING SCHEDULE

EMMERGENT WETLAND - BASE FLOW - Q2 (0.20 ACRES)				
SYMBOL	SCIENTIFIC NAME	COMMON NAME	PROPAG. TYPE	INSTAL'N QTY
TREES				
⊗	SALIX LAEVIGATA	RED WILLOW	POLE	6
SHRUBS				
×	SALIX LASIOLEPIS	ARROYO WILLOW	POLE	104

RIPARIAN BANK - Q2 TO Q5 (0.45 ACRES)				
SYMBOL	SCIENTIFIC NAME	COMMON NAME	PROPAG. TYPE	INSTAL'N QTY
TREES				
⊗	SALIX LAEVIGATA	RED WILLOW	POLE	19
SHRUBS				
×	SALIX LASIOLEPIS	ARROYO WILLOW	POLE	164

RIPARIAN UPPER BANK Q5 AND ABOVE (0.21 ACRES)				
SYMBOL	SCIENTIFIC NAME	COMMON NAME	PROPAG. TYPE	INSTAL'N QTY
TREES				
	POPULUS FREMONTII	COTTONWOOD	POLE	4
	PLATANUS RACEMOSA	WESTERN SYCAMORE	TP4	8
	QUERCUS AGRIFOLIA	COAST LIVE OAK	ACORN	5
SHRUBS				
⊙	ROSA CALIFORNICA	CALIFORNIA ROSE	POLE	17
⊛	SAMBUCUS NIGRA SSP. CAERULEA	ELDERBERRY	POLE	6
⊛	SALIX EXIGUA	NARROW-LEAVED WILLOW	POLE	6

SEED MIXES

SEED MIX EMERGENT WETLAND - (BASE - Q2)			
SYMBOL	SCIENTIFIC NAME	COMMON NAME	AMOUNT TOTAL (LBS PLS)
	AGROSTIS EXARATA	SPIKE BENTGRASS	0.08
	CYPERUS ERAGROSTIS	TALL FLATSEDGE	0.04
	EUTHAMIA OCCIDENTALIS	WESTERN GOLDENROD	0.49
	JUNCUS EFFUSUS	BOG RUSH	0.25
	NASTURTIUM OFFICINALE	WATERCRESS	0.49
	OENANTHE SARMENTOSA	WATER PARSLEY	0.46
		TOTAL	1.81

SEED MIX RIPARIAN BANK - (Q2 - Q5)			
SYMBOL	SCIENTIFIC NAME	COMMON NAME	AMOUNT TOTAL (LBS PLS)
	ARTEMISIA DOUGLASIANA	MUGWORT	2.64
	CYPERUS ERAGROSTIS	TALL FLATSEDGE	0.12
	DESCHAMPSIA ELONGATA	SLENDER HAIRGRASS	0.49
	HORDEUM BRACHYANTHERUM	MEADOW BARLEY	5.05
		TOTAL	8.3

SEED MIX RIPARIAN UPPER BANK - (Q5 - Q25)			
SYMBOL	SCIENTIFIC NAME	COMMON NAME	AMOUNT TOTAL (LBS PLS)
	BROMUS CARINATUS	CALIFORNIA BROME	1.28
	CAREX BARBARAE	SANTA BARBARA SEDGE	0.19
	ELYMUS CONDENSATUS	GIANT WILDRYE	1.13
	ELYMUS GLAUCUS	BLUE WILDRYE	0.87
	ELYMUS TRITICOIDES	BEARDLESS WILDRYE	0.55
	FESTUCA MICROSTACHYS	SMALL FESCUE	0.28
	TRIFOLIUM WILDENOVII	TOMCAT CLOVER	0.24
		TOTAL	4.52

NOTES

1. SEED QUANTITIES PROVIDED IN PLANTING LIST ARE IN POUNDS OF PURE LIVE SEED (PLS).
2. INSTALL PLANT MATERIALS IN QUANTITIES AS SHOWN GRAPHICALLY ON DRAWINGS.
3. NO PLANT, CUTTING OR SEED SPECIES OR VARIETY CAN BE SUBSTITUTED, ALTERED OR DELETED FROM THIS PROJECT WITHOUT THE WRITTEN APPROVAL OF THE CITY REPRESENTATIVE.
4. IN ADDITION TO AREAS TO BE SEEDED WHERE INDICATED ON PLANTING PLANS, CONTRACTOR SHALL SEED ANY AREAS DISTURBED BY CONSTRUCTION, VEHICLE OR EQUIPMENT ACCESS, STAGING, MATERIAL STORAGE OR RELATED ACTIVITIES. USE NATIVE EROSION CONTROL MIX AT THE RATE OF 65 LBS OF PLS/ACRE CONSISTING OF 6 LBS VULPIA MICROSTACHYS 'THREE WEEKS FESCUE', 4 LBS TRIFOLIUM WILDENOVII 'TOMCAT CLOVER', 5 LBS NASSELA CERNUA 'NODDING NEEDLEGRASS', 10 LBS ELYMUS GLAUCUS 'BLUE WILDRYE', 5 LBS HORDEUM BRACHYANTHERUM SPP. CALIFORNICUM 'CALIFORNIA MEADOW BARLEY. SEED MIX AVAILABLE AT PACIFIC COAST SEED. WHERE SOIL IS COMPACTED OVER 80% RELATIVE COMPACTION, AND AS DETERMINED BY CITY REPRESENTATIVE, SOIL SHALL BE RIPPED OR ROTOTILLED TO THE DEPTH OF 9", RINGROLLED OR RAKED PARALLEL WITH CONTOUR AND SEED SHALL BE RAKED IN (PARALLEL W/CONTOUR). EXISTING ORGANIC DUFF AND DEBRIS SHALL BE SALVAGED AND DISTRIBUTED EVENLY OVER SEEDED AREAS ON SLOPES BETWEEN 4:1 AND 3:1 TO PROVIDE A MIN.1/2 THICK LAYER. SLOPES BETWEEN 3:1 AND 1.5:1 SHALL BE PROTECTED WITH COIR NETTING (FABRIC) OF 600gm2 (3:1 to 2:1) AND 900gm2 (2:1 to 1.5:1) WEIGHT. COIR FABRIC SHALL BE ANCHORED WITH 24" LONG, WEDGE-SHAPED STAKES CUT FROM 2X4 NPT DF WOOD, STAGGERED AT 3'-0" O.C.
5. 5% OR 5 (WHICHEVER LARGER) OF CONTAINERIZED PLANTS OF EACH SPECIES SHALL BE TESTED IN THE SOURCE NURSERY FOR PHYTOPHTHORA INFESTATION. IF A PLANT OF ANY SPECIES TESTS POSITIVE FOR PHYTOPHTHORA, NO OTHER PLANTS OF THE SAME SPECIES FROM THE SAME NURSERY WILL BE ALLOWED IN THE PROJECT. PLANTS WILL BE SUBSTITUTED FROM A DIFFERENT NURSERY (AFTER TESTING THERE PROVES THEY ARE NEGATIVE FOR PHYTOPHTHORA). NO INFECTED, DISEASED OR INSECT INFESTED PLANT SHALL BE DELIVERED TO THE PROJECT AREA.
6. NURSERY PLANTS DELIVERED TO THE PROJECT AREA SHALL BE IN A THRIVING CONDITION AND SHALL SHOW NO SIGNS OF ANY NUTRIENT OR MINERAL DEFICIENCIES.
7. PLANTS SHALL BE IN THRIVING CONDITION BOTH AT THE TIME OF DELIVERY TO THE SITE AND DURING THE FINAL PLANT INSTALLATION ACCEPTANCE INSPECTION. THE CONTRACTOR SHALL BE RESPONSIBLE FOR THEIR PROTECTION AND ALL NECESSARY MAINTENANCE, INCLUDING TEMPORARY IRRIGATION BETWEEN PLANT DELIVERY TO THE PROJECT AREA AND INSTALLATION ACCEPTANCE INSPECTION.

N

SCALE
0 15 30 60
1 INCH = 30 FEET
AT 34" X 22" DRAWING SIZE
SCALE ACCORDINGLY IF REDUCED

CITY OF SAN LUIS OBISPO

PROJECT TITLE: CALLE JOAQUIN LIFT STATION REPLACEMENT

SHEET TITLE: PLANTING PLAN

DESIGNED BY: GS
DRAWN BY: CM
CHECKED BY: GS
APPROVED BY: DSC
SCALE:
DATE: OCTOBER 2020
CITY SPECIFICATION NO. 91133
DRAWING NO. L-101
SHEET NO. 31 of 56

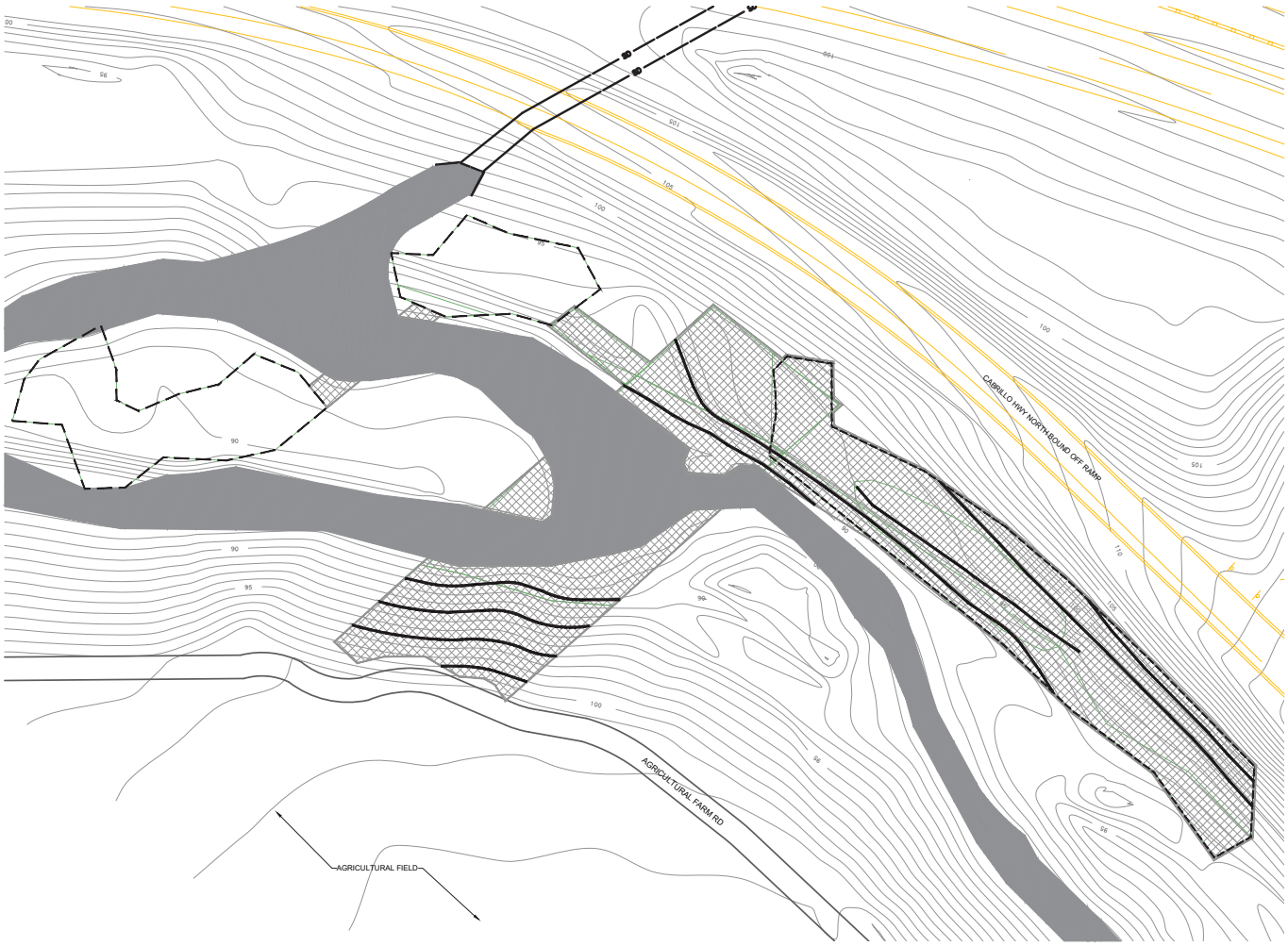

LEGEND

- ARUNDO DONAX HAND REMOVAL AREA
- ARUNDO DONAX MECHANICAL REMOVAL AREA
- EROSION CONTROL FABRIC
- COIR LOG

NOTES

N

SCALE

0 15 30 60

1 INCH = 30 FEET
AT 34" X 22" DRAWING SIZE
SCALE ACCORDINGLY IF REDUCED

CITY OF SAN LUIS OBISPO

PROJECT TITLE:

CALLE JOAQUIN LIFT STATION REPLACEMENT

SHEET TITLE:

INVASIVE SPECIES REMOVAL AND EROSION CONTROL PLAN

LICENSED LANDSCAPE ARCHITECT
GARY SCHIFFMAN
10-20-20
STATE OF CALIFORNIA

DESIGNED BY:	GS
DRAWN BY:	CM
CHECKED BY:	GS
APPROVED BY:	DSC
SCALE:	
DATE:	OCTOBER 2020
CITY SPECIFICATION NO.	91133
DRAWING NO.	L-102
SHEET NO.	32 of 56

DWG: \\USSWFPPSWO01\Data\Work\city of san luis obispo\60225711 - calle joaquin lift station\WOD_cnst_ph\02-sheets\Landscape\L-02\20051313_SLO_L-02_Invasive and Erosion.dwg USER: GRoberts@D
DATE: Dec 07, 2020 3:56pm XREFS: existing_trees LOWR TOPO REF-G-IB_CALLE JOAQUIN 2020 IMAGES: 20050925_MarkupandCutLogoneContours.jpg SLO emblem_bmp_med_gs.tif

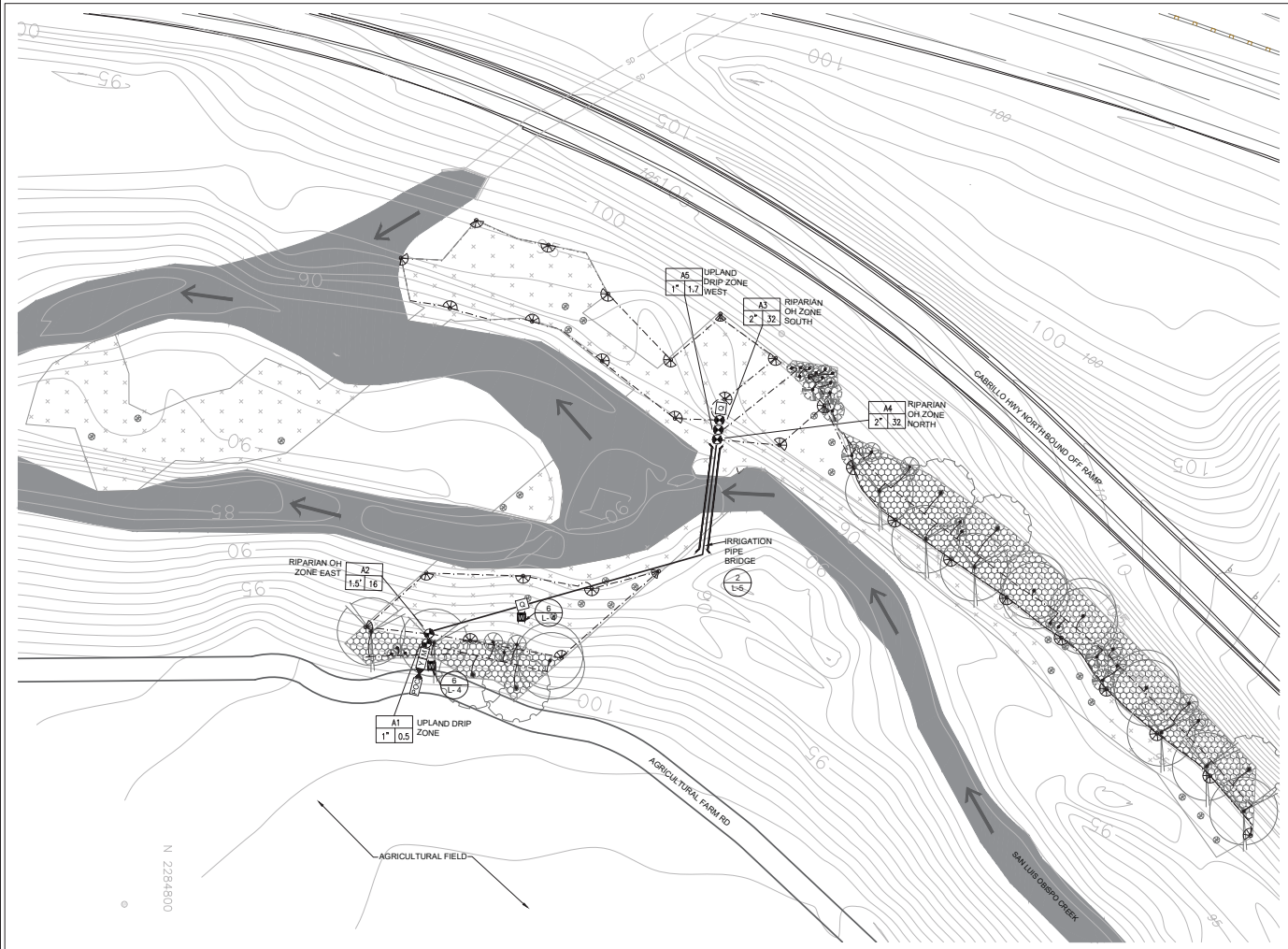

SCALE

0 15 30 60

1 INCH = 30 FEET

IRRIGATION LEGEND

SYMBOL	DESCRIPTION	REMARKS
POC	POINT OF CONNECTION	1.5" GALV. STEEL PIPE W/Y-STRAINER, CAM LOCK, & LOCKABLE CAP; SET IN CONCRETE FOOTING.
Y	WYE STRAINER	1.5" GRAINGER 20H630 Y-STRAINER; FNPTxFNPT 1/16" MESH, CAST IRON, SS, PTFE
	MAIN VALVE (MANUAL)	1.5" LEGEND #T-601 PVC BALL VALVE; FPTxFPT IN LOCK'G RECTANGULAAR VALVE BOX W/METER
M	WATER METER	1.5" GPI TM WATER METER W/PVC BODY/PIPE W/LITHIUM BATTERY IN LOCK'G PURPLE VALVE BOX
	LATERAL VALVE (MANUAL)	LEGEND PVC BALL VALVE; FPTxFPT IN ROUND LOCK'G VALVE BOX; SIZE AS INDICATED ON PLAN
A3 3" 85	LATERAL VALVE INFO	A3 — VALVE NUMBER; 3" — VALVE SIZE IN INCHES; 85 — FLOW IN GPM
Q	QUICK COUPLER	HUNTER 1" HQ44-LRC - R QUICK COUPLING VALVE WITH PURPLE COVER OPTION IN ROUND PURPLE LOCKING VALVE BOX
	SLEEVING	GALV. STEEL PIPE 2X THE DIA. OF PIPE BURIED 6", WHERE NEEDED FOR MAINT. VEHICLE ACCESS
	PVC MAINLINE	SCH. 40 PVC PIPE <2" DIA & CLASS 315 PVC 2" & OVER, SURFACE MOUNT". USE RECYCLED WATER PUPRLE PIPES. SEE SPECS.
	PVC LATERAL	CLASS 200 PVC PIPE, BURY 6". USE MATCHING HUNTER FITTINGS TO COONECT TO DRIPLINE. USE RECYCLED WATER PUPRLE PIPES. SEE SPECS.
	DRIP IRRIGATION LINE PLACED IN A 6" RADIUS CIRCLE AROUND THE STEM OR CENTER OF THE PLANTING	HUNTER PLD-04-24-R DRIP EMMITER TUBBING - 0.4 GPH WITH DRIP EMITTERS @ 24" O.C., BURY 4-6"; MIN 3 EMITTERS PER PLANT.
	POLYETHYLENE TUBING	HUNTER PLD-BLNK-R TUBING, BURY 4-6". USE MATCHING HUNTER IRRIGATION FITTINGS TO CONNECT TO DRIPLINE.
	SPRINKLER HEAD SET TO COVER 180 DEGREES	HUNTER I-20-R LT. GREEN 180 DEGREES 4" POP-UP ON 5' RISER W/CHECK VALVE, 2.96 GPM @ 45 PSI;
	SPRINKLER HEAD SET TO COVER 120 DEGREES	HUNTER I-20-R LT.GREEN 120 DEGREES 4" POP-UP ON 5' RISER W/CHECK VALVE, 1.85 GPM @ 45 PSI; 31' RADIUS
	SPRINKLER HEAD SET TO COVER 90-120 DEGREES	HUNTER I-20-R LT. GREEN 90 DEGREES 4" POP-UP ON 5' RISER W/CHECK VALVE, 1.40 GPM @ 45 PSI; 31' RADIUS
	RECYCLED WATER SIGN	

IRRIGATION NOTES

1. THE IRRIGATION SYSTEM DESIGN IS BASED ON AN AVAILABLE WATER PRESSURE OF 55 PSI AND MAX. FLOW RATE OF 100 GPM FROM A WATER TRUCK AT THE POINT OF CONNECTION. VERIFY WATER PRESSURE AVAILABLE FROM COMPANY TRUCK AND CAM LOCK TYPE PRIOR TO ORDERING MATERIALS OR BEGINNING CONSTRUCTION AND PROMPTLY REPORT ANY DISCREPANCIES TO LANDSCAPE ARCHITECT.
2. THIS SYSTEM IS DESIGNED FOR USE OF RECYCLED WATER.
3. THE IRRIGATION SYSTEM IS SHOWN DIAGRAMMATICALLY FOR CLARITY. LOCATE ALL PIPING, VALVES, AND OTHER IRRIGATION EQUIPMENT WITHIN RESTORATION AREAS UNLESS NOTED OR DIRECTED OTHERWISE. ROUTE ANY UNDERGROUND LINES AS CLOSE TO PARALLEL WITH CONTOURS AS POSSIBLE TO PREVENT EROSION.
4. PRIOR TO ANY EXCAVATION OR TRENCHING, LOCATE AND VERIFY ALL UNDERGROUND UTILITIES. CONTACT AN UNDERGROUND UTILITY LOCATING SERVICE, TO LOCATE AND MARK ALL UTILITIES. TAKE PROPER PRECAUTIONS NOT TO DAMAGE OR DISTURB SUCH UNDERGROUND UTILITIES. NOTIFY THE LANDSCAPE ARCHITECT IMMEDIATELY IF A CONFLICT EXISTS BETWEEN SUCH OBSTACLES AND THE PROPOSED WORK. PROCEED IN THE SAME MANNER IF ROCK LAYERS OR ANY OTHER CONDITIONS ARE ENCOUNTERED UNDERGROUND.
5. SHOULD THE CONTRACTOR FAIL TO NOTIFY THE LANDSCAPE ARCHITECT OF ANY DISCREPANCIES BETWEEN THE PLANS AND THE FIELD CONDITIONS, THEN THE CONTRACTOR SHALL BE RESPONSIBLE FOR ANY REVISIONS NECESSARY AT NO ADDITIONAL COST TO THE CITY.
6. VALVES SHALL BE MANIFOLDED AND GROUPED IN GENERAL AREAS SHOWN ON PLAN. CONTRACTOR SHALL VERIFY VALVE LOCATIONS WITH LANDSCAPE ARCHITECT BEFORE INSTALLATION.
7. IRRIGATION LINES SHALL BE INSTALLED WITHIN RESTORATION AREAS WHEREVER POSSIBLE UNLESS INDICATED OTHERWISE. IRRIGATION LINES SHALL BE SURFACE MOUNTED AND ANCHORED TO THE GROUND WITH 12" LONG U-SHAPED STAPLES MADE OF #3 REBAR AT 10' O.C. MAX. ADDITIONAL STAPLES SHALL BE PROVIDED AT ANY CHANGE OF DIRECTION, VALVE, SPRINKLER RISER, QUICK COUPLER AND SIMILAR IRRIGATION COMPONENTS.
8. ALL IRRIGATION LINES UNDER VEHICULAR TRAFFIC AREAS, AND DRIVEABLE TRAILS SHALL BE SLEEVED AS INDICATED IN IRRIGATION LEGEND.
9. SHOULD THE CONTRACTOR MAKE NOZZLE CHANGES OR ADD HEADS AS A RESULT OF SITE OBSTACLES OR CONSTRUCTION CHANGES, THEN THE CONTRACTOR SHALL BE RESPONSIBLE FOR CALCULATION AND ADJUSTMENTS IN PIPE SIZES. IN NO CASE SHALL IRRIGATION LINE FLOW VELOCITIES EXCEED 5 FEET PER SECOND.
10. INSTALL HUNTER CHECK VALVES AS NECESSARY TO PREVENT LOW HEAD DRAINAGE.
11. INSTALL PE-FLEX DRIP IRRIGATION LINE AND DRIP EMITTERS UNDERGROUND AND PARALLEL WITH SLOPE WHERE FEASIBLE. THE EXACT LOCATION OF DRIPPER LINES SHALL BE SHOWN ON AS-BUILT PLANS; FINAL LOCATION AROUND PLANTS WILL BE DETERMINED BY LANDSCAPE ARCHITECT DURING INSTALLATION OF TREES AND SHRUBS IN THE FIELD.

IRRIGATION PIPE CHART

MAX. FLOW (GPM)	10	12	16	22	28	30	50	70	100
CLASS 200 PVC PIPE - LATERAL	.75"	-	-	1"	1.25"	1.5"	-	-	-
SCH. 40 PVC PIPE - MAIN	-	1"	-	1.25"	-	1.5"	-	-	-
CLASS 315 PVC PIPE - MAIN	-	-	-	-	-	-	2"	2.5"	3"
MAINTAIN FRICTION LOSS BELOW 2.5PSI/100' OF PIPE LENGTH & VELOCITY BELOW 5.0 FPS.									

AECOM WATER

90% PLANSET

NOT TO BE USED FOR CONSTRUCTION

DATE: MAY 2020

CITY OF SAN LUIS OBISPO

PROJECT TITLE: CALLE JOAQUIN STREAM RESTORATION

SHEET TITLE: IRRIGATION PLAN

DESIGNED BY: GS

DRAWN BY: CM

CHECKED BY: GS

APPROVED BY: DSC

SCALE: 1"=10'-0"

DATE: MAY 2020

CITY SPECIFICATION NO. 91133

PLAN FILE NO. / LOCATION L-103

SHEET NO. 33 of 55

DWG: \\USBKFTPP3W001\Data\Work\City of san luis obispo\60225711 - calle joaquin lift station\900_cad_gis\01-drawing\Landscape\L-03\20051L3_SLO-L03 - IRRIGATION.dwg
Date: Jul 07, 2020 - 3:56pm USER: GHidandaziD
XREFS: 5-DB-CALLE JOAQUIN (2020) 5-Check Valve Trees.DWG
2020414_slo_cost estimate.dwg 2020414_slo_cost estimate trees shrubs scope 4.dwg 2020414 SLO-Cost Estimate.dwg 2020414 Planting Plan.dwg 2020428_SLO_Plan

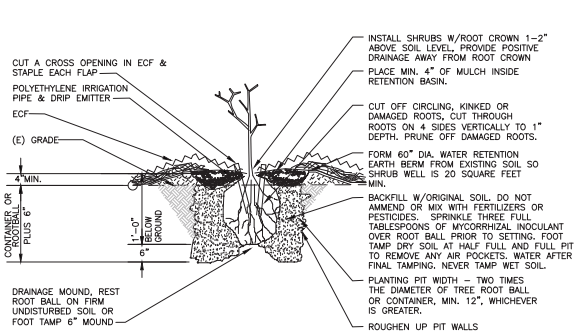

1 TREE PLANTING DETAIL
NTS

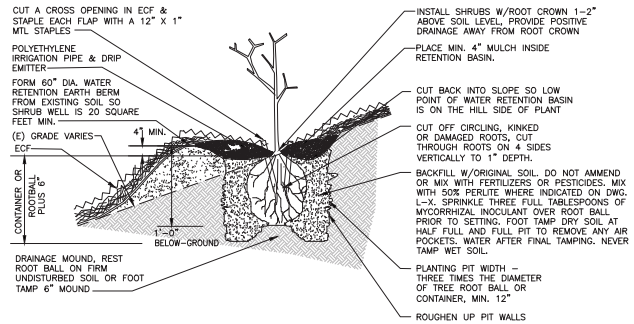

2 TREE PLANTING ON SLOPE
NTS

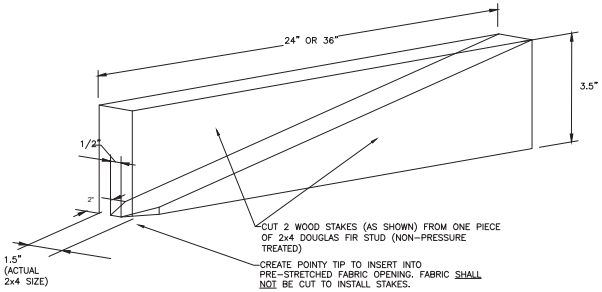

3 TYPICAL WOOD STAKE DETAIL
NTS

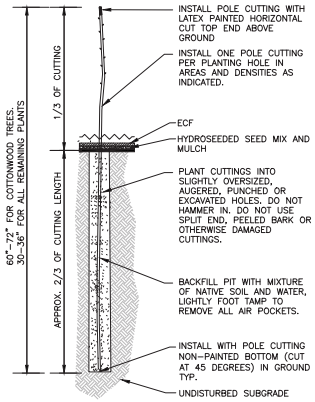

4 POLE PLANTING DETAIL
NTS

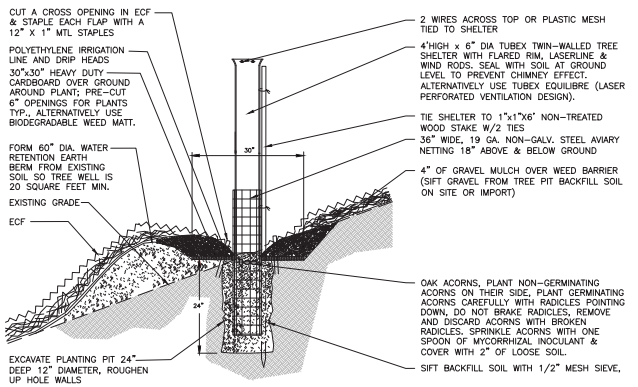

5 ACORN PLANTING DETAIL
NTS

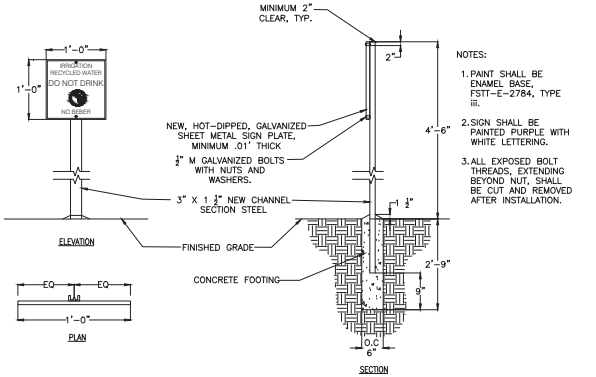

6 RECYCLED WATER SIGN
NTS

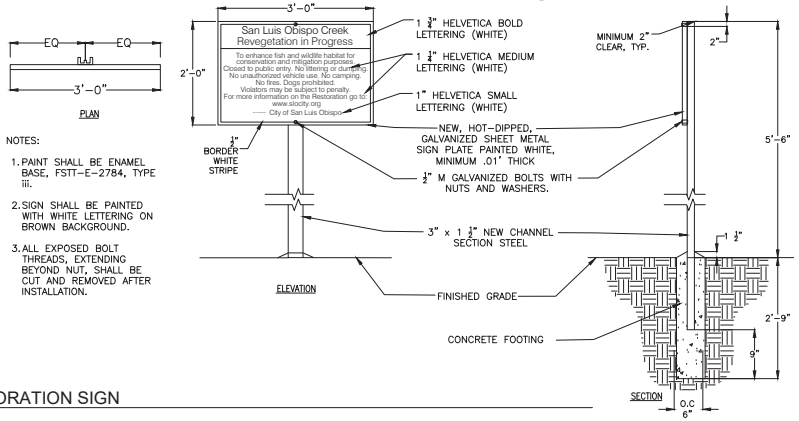

7 RESTORATION SIGN
NTS

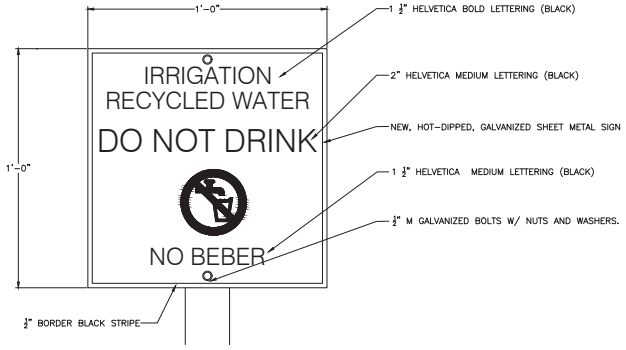

8 RECYCLED WATER SIGN LETTERING DETAIL
NTS

AECOM WATER
90% PLANSET
NOT TO BE USED FOR CONSTRUCTION
DATE: MAY 2020

CITY OF SAN LUIS OBISPO

CALLE JOAQUIN STREAM RESTORATION

MISCELLANEOUS DETAILS

PROJECT TITLE:

SHEET TITLE:

DESIGNED BY: GS
DRAWN BY: CM
CHECKED BY: GS
APPROVED BY: DSC
SCALE:
DATE: MAY 2020
CITY SPECIFICATION NO. 91133
PLAN FILE NO. / LOCATION L-104
SHEET NO. 34 of 55

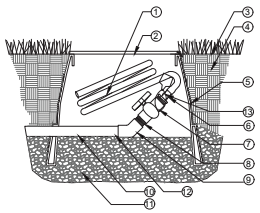

① 18" MINIMUM LENGTH OF 1/2" RUBBER HOSE.
② 10" ROUND VALVE BOX WITH BOLT DOWN LID, A STAINLESS STEEL BOLT AND WASHER SPECS. (DO NOT CUT ADDITIONAL HOLES IN BOX)
③ FINISH GRADE.
④ BACKFILL SOIL
⑤ FILTER FABRIC. WRAP 1 LAYER AROUND BOX COVERING HOLES.
⑥ PVC SCH 40 BARB HOSE ADAPTER.
⑦ PVC SCH 40, BALL VALVE.
⑧ PVC SCH 40, THREADED NIPPLE.
⑨ PVC SCH 40, 45 DEGREE ELL.
⑩ TERMINAL END OF NON-PRESSURE LATERAL DRIPPER LINE, SEE PLAN FOR SIZE.
⑪ 3/4" GRAVEL BASE AND SUMP. (COMPACT GRAVEL FOR BOX BASE DO NOT USE BLOCKS OR BRICKS FILL GRAVEL TO BOTTOM OF VALVE.
⑫ POLY/PVC ADAPTER. WHEN APPLICABLE.
⑬ ATTACH RECYCLED WATER WARNING TAG

NOTE: USE TEFLON TAPE ON ALL THREADED CONNECTIONS

1 DRIPPERLINE END FLUSH VALVE
NTS

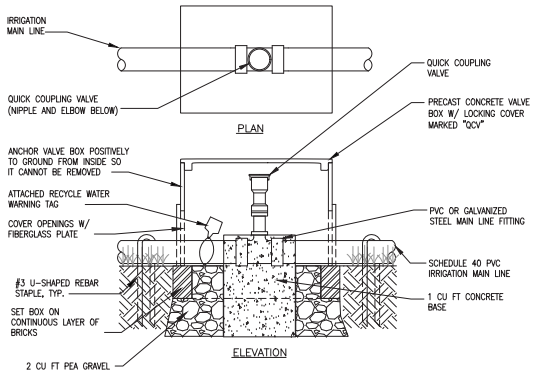

3 QUICK COUPLER VALVE BOX
NTS

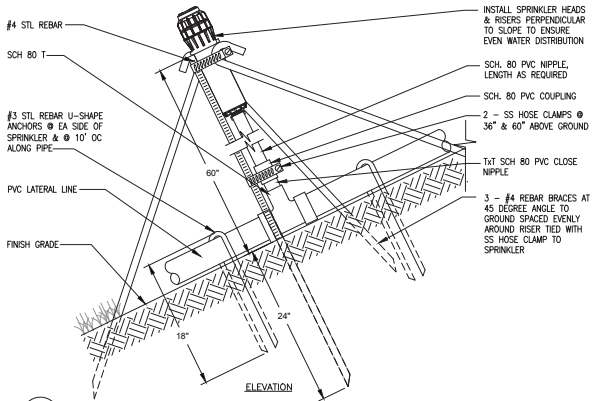

4 SPRINKLER ON BRACED RISER ON RIPARIAN BANK
NTS

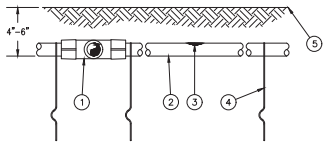

① EASY FIT COMPRESSION TEE
② SUB-SURFACE DRIPLINE
③ INLINE DRIP EMITTER
④ TIE DOWN STAPLE
⑤ FINISH GRADE WITH MULCH

NOTES:

1. PLACE TIE DOWN STAPLES AS INDICATED IN IRRIGATION LEGEND.

2. AT FITTINGS WHERE THERE IS A CHANGE OF DIRECTION SUCH AS TEES OR ELBOWS, USE TIE-DOWN STAKES ON EACH LEG OF THE CHANGE OF DIRECTION.

5 SUBSURFACE DRIPLINE
NTS

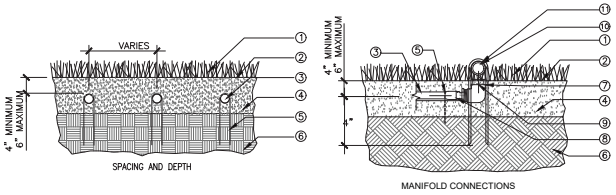

① PLANT MATERIAL PER PLANTING PLAN.
② FINISH GRADE
③ DRIPPERLINE. - SEE LEGEND.
④ BACKFILL SOIL
⑤ 6" LONG VINYL COATED TUBING STAPLE. 1 PER EMITTER, PUSH INTO SOIL SO STAPLE HOLDS PIPE FIRMLY W/O CONSTRICTION
⑥ EXISTING SUBGRADE
⑦ SCH 40 PCV ELL, LINE SIZE SLIP X 1/2" FIPT.
⑧ 1/2" BARBED MALE ADAPTER
⑨ RISER FROM LATERAL DEPTH. LENGTH AS REQUIRED.
⑩ LATERAL LINE. REFER TO PLAN FOR SIZE.
⑪ #3 REBAR U-SHAPED STAPLE, 12" LONG, INSTALL 10' O.C. AND AT ALL CHANGES OF DIRECTION, VALVES, RISERS, QUICK COUPLERS AND SIMILAR IRRIG. COMP.

NOTE: USE TEFLON TAPE ON ALL THREADED CONNECTIONS

6 SUBSURFACE DRIPPLERLINE
NTS

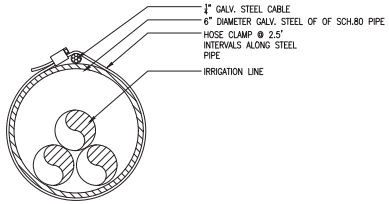

7 STEEL PIPE ON PIPE BRIDGE
NTS

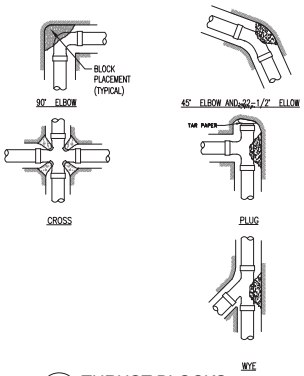

THRUST BLOCK SCHEDULE						
PIPE SIZE	BEARING AREAS IN SQUARE FEET					
	TEE	PLUG	WYE	90°	45°	22-1/2°
6"	3	3	3	4	2	1
4" OR LESS	1.5	1.5	1.5	2	1.1	0.5

7 THRUST BLOCKS
NTS

AECOM WATER

90% PLANSET

NOT TO BE USED FOR CONSTRUCTION

DATE: MAY 2020

CITY OF SAN LUIS OBISPO

CALLE JOAQUIN STREAM RESTORATION

PROJECT TITLE:

IRRIGATION DETAILS

SHEET TITLE:

DESIGNED BY: GS
DRAWN BY: CM
CHECKED BY: GS
APPROVED BY: DSC
SCALE:
DATE: MAY 2020
CITY SPECIFICATION NO. 91133
PLAN FILE NO. / LOCATION L-105
SHEET NO. 35 of 55

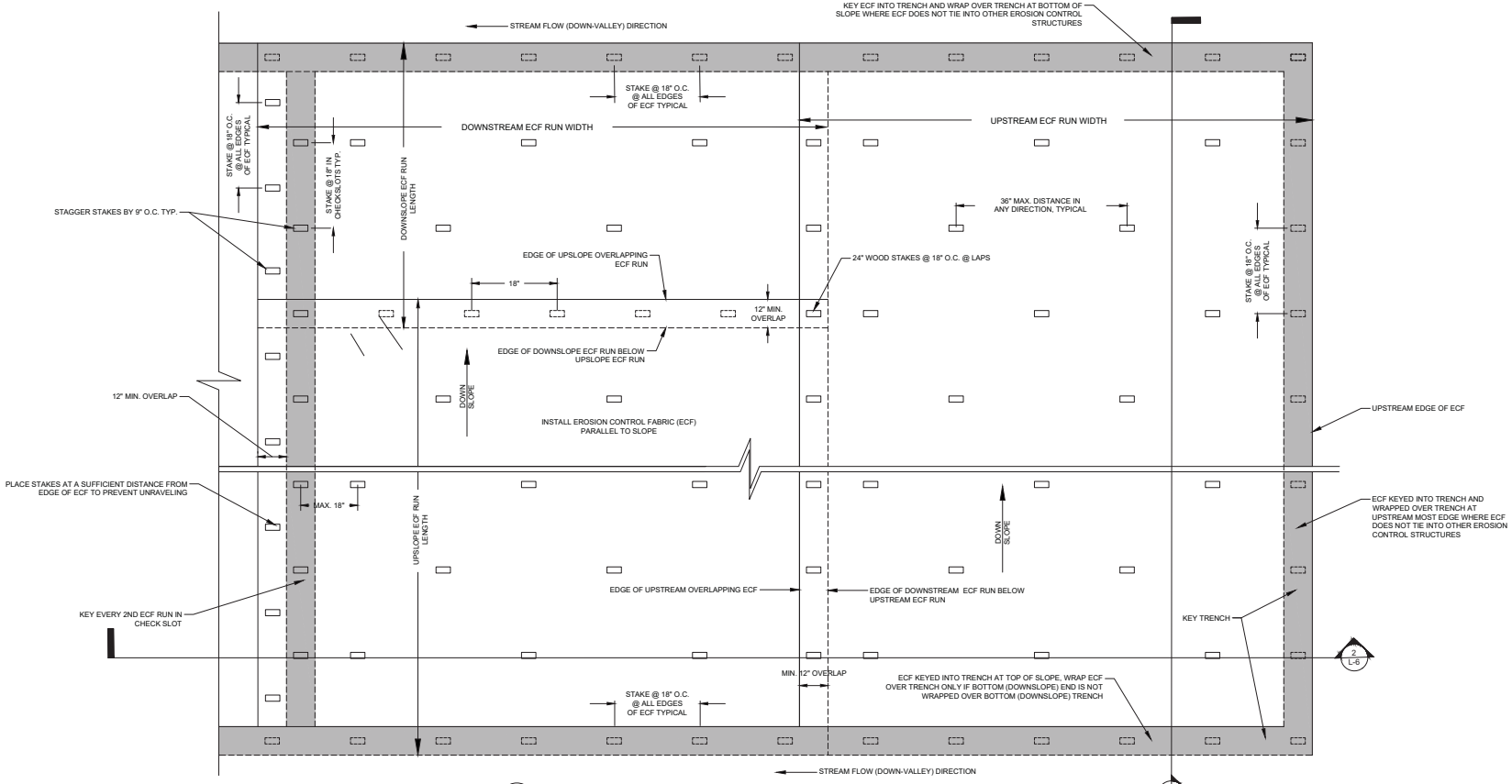

1 EROSION CONTROL FABRIC TYPICAL INSTALLATION PLAN
NTS

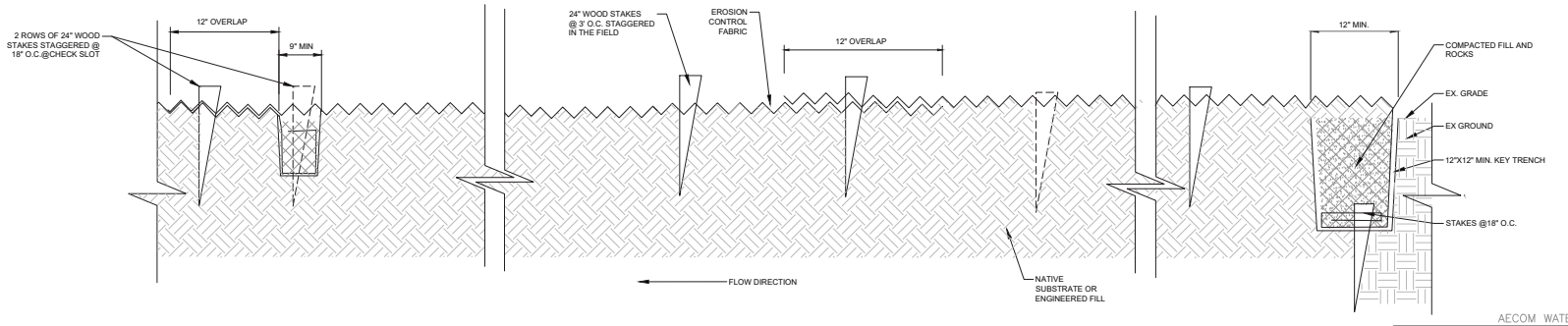

2 EROSION CONTROL FABRIC TYPICAL INSTALLATION SECTION
NTS

AECOM WATER
90% PLANSET
NOT TO BE USED FOR CONSTRUCTION
DATE: MAY 2020

CITY OF SAN LUIS OBISPO

PROJECT TITLE: CALLE JOAQUIN STREAM RESTORATION

SHEET TITLE: DETAILS

LICENSED LANDSCAPE ARCHITECT
11-21-20
10-20-20
STATE OF CALIFORNIA

DESIGNED BY: GS
DRAWN BY: CM
CHECKED BY: GS
APPROVED BY: DSC
SCALE:
DATE: MAY 2020
CITY SPECIFICATION NO. 91133
PLAN FILE NO. / LOCATION L-106
SHEET NO. 36 of 55

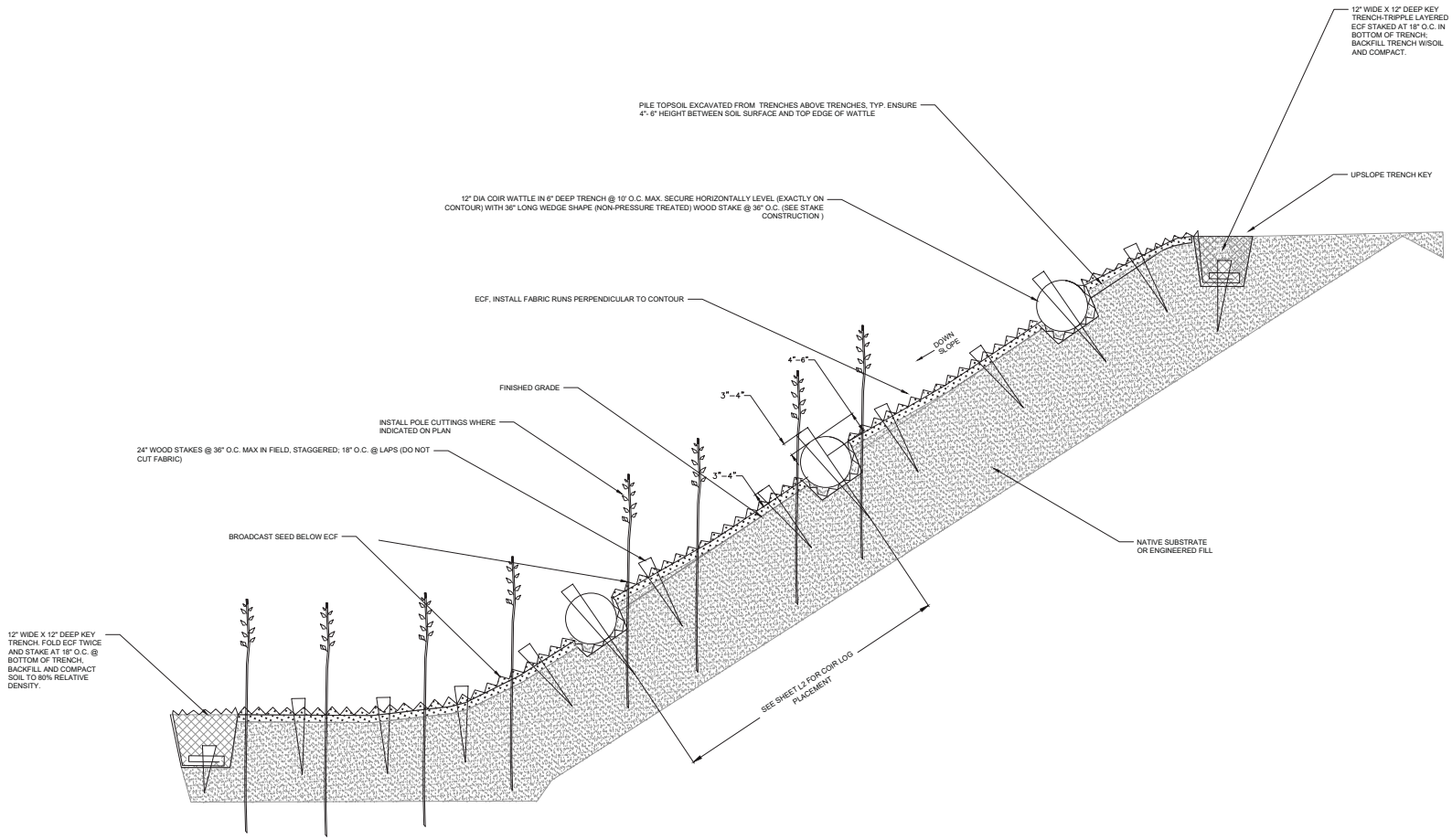

1 EROSION CONTROL FABRIC - TYPICAL SECTION PERPENDICULAR TO STREAM FLOW DIRECTION
NTS

AECOM WATER
90% PLANSET
NOT TO BE USED FOR CONSTRUCTION
DATE: MAY 2020

CITY OF SAN LUIS OBISPO

PROJECT TITLE: CALLE JOAQUIN STREAM RESTORATION

SHEET TITLE: DETAILS

DESIGNED BY: GS
DRAWN BY: CM
CHECKED BY: GS
APPROVED BY: DSC
SCALE:
DATE: MAY 2020
CITY SPECIFICATION NO. 91133
PLAN FILE NO. / LOCATION L-107
SHEET NO. 37 of 55

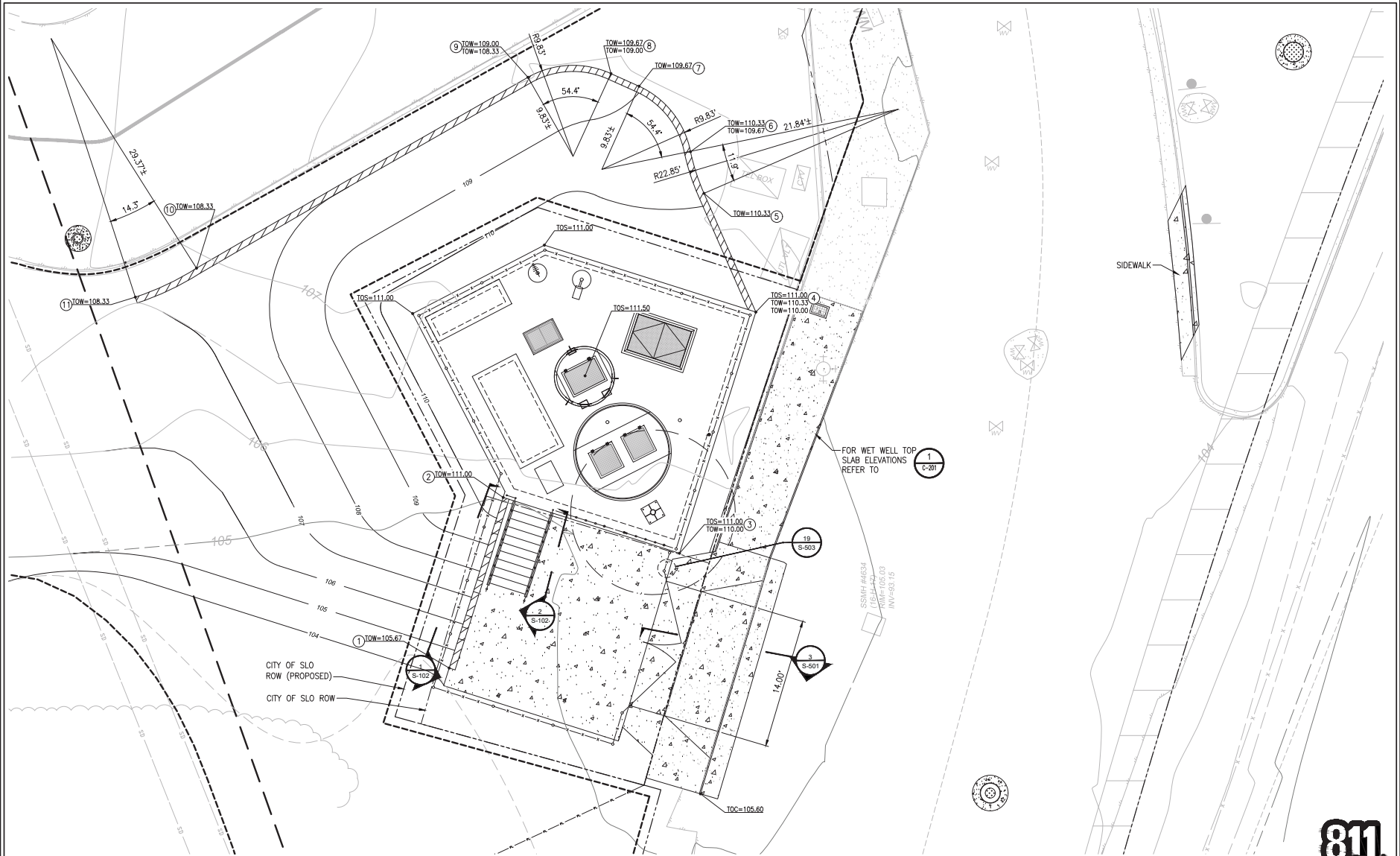

PUMP STATION STRUCTURE AND WALL LAYOUT PLAN

SCALE: 1" = 5'-0"

1 / -

NOTE:

1. THE NUMBERED CALL OUTS CORRESPOND TO WALL PROFILE ELEVATIONS. SEE SHEET S-102.

N

SCALE

0 2.5 5 10

1 INCH = 5 FEET

811 Know what's below. Call before you dig.

CITY OF SAN LUIS OBISPO

CALLE JOAQUIN LIFT STATION REPLACEMENT

PROJECT TITLE:

PUMP STATION STRUCTURE AND WALL LAYOUT PLAN

SHEET TITLE:

REGISTERED PROFESSIONAL ENGINEER DANIEL S. CROSSLEY No. 73077 CIVIL STATE OF CALIFORNIA

DESIGNED BY:	DC
DRAWN BY:	NR
CHECKED BY:	
APPROVED BY:	
SCALE:	SEE DWG
DATE:	OCTOBER 2020
CITY SPECIFICATION NO.	91133
DRAWING NO.	S-101
SHEET NO.	38 of 56

DWG: \\USSWI1PPSPWO1\Data\Work\city of san luis obispo\60225711 - calle joaquin lift station\900_cad_gis\02-sheets\SHT-S-101.dwg USER: GhBenbacoD
DATE: Dec 07, 2020 3:59pm XREFS: REF-C_TP REF-C_BS REF-C_CP REF-C_LP REF-C_SP IMAGES: SLO embem, bmp, med, jpc,tif

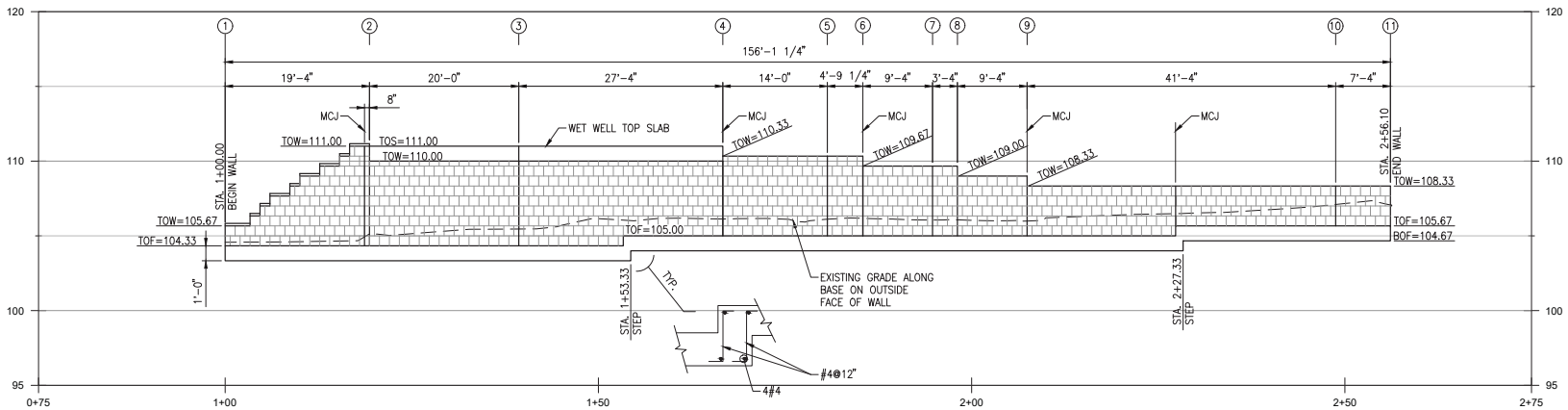

WALL PROFILE @ FRONT FACE OF WALL

SCALE: HORZ. 1/8" = 1'-0"
VERT. 1/4" = 1'-0"

1 / –

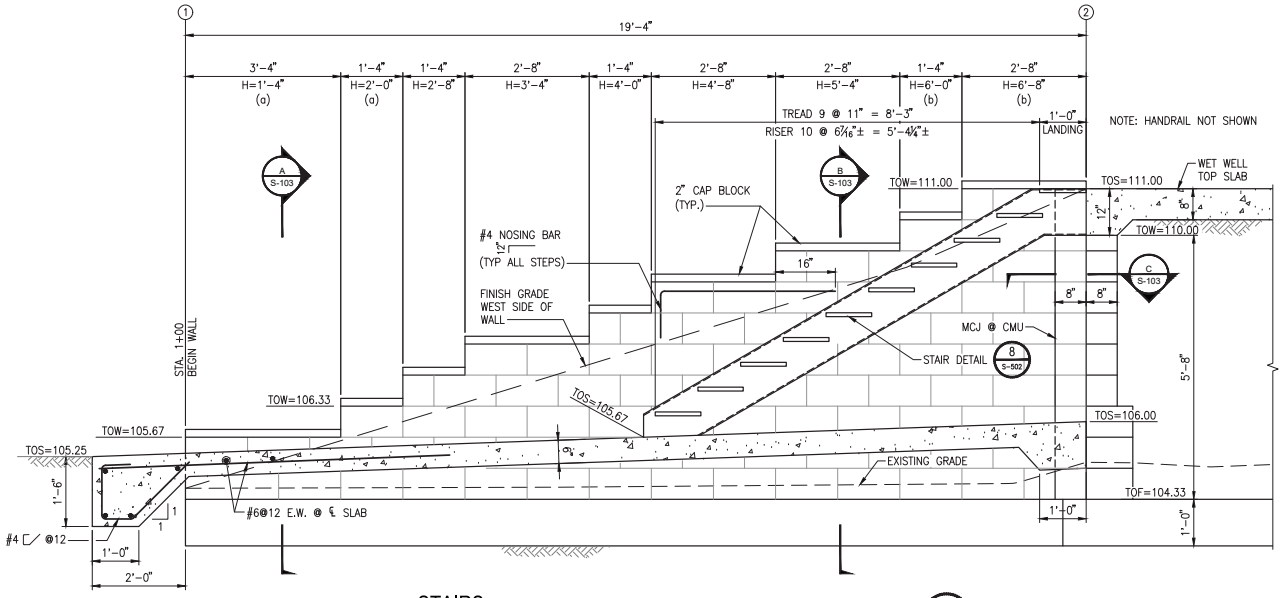

STAIRS

SCALE: 3/4" = 1'-0"

2 / –

MASONRY WALL HEIGHT	
LOCATION	HEIGHT
1 – 2	VARIES
2 – 3	5'-8"
3 – STEP	5'-8"
STEP – 4	5'-0"
4 – 5	5'-4"
5 – 6	5'-4"
6 – 7	4'-8"
7 – 8	4'-8"
8 – 9	4'-0"
9 – STEP	3'-4"
STEP – 10	2'-8"
10 – 11	2'-8"

NOTES:

1. EXTERIOR OF MASONRY WALL SHALL BE STUCCO COATED IN ACCORDANCE WITH SPECIFICATION SECTION 092000.
2. MCJ – MASONRY CONTROL JOINT
3. SEE 1/S-103 FOR WALL DIMENSIONS AND REINFORCING.

811 Know what's below. Call before you dig.

PROJECT TITLE: CALLE JOAQUIN LIFT STATION REPLACEMENT

SHEET TITLE: WALL PROFILE AND DETAILS

REGISTERED PROFESSIONAL ENGINEER DANIEL S. CROSSLEY No. 73077 CIVIL STATE OF CALIFORNIA

DESIGNED BY:	DC
DRAWN BY:	NR
CHECKED BY:	
APPROVED BY:	
SCALE:	SEE DWG
DATE:	OCTOBER 2020
CITY SPECIFICATION NO.	91133
DRAWING NO.	S-102
SHEET NO.	39 of 56

DWG: \\USSWI1PPSPWO1\Data\Work\city of san luis obispo\60225711 - calle joaquin lift station\WO_cost_sph\02-sheets\SHT-S-102.dwg USER: GhBenbacciD
DATE: Dec 07, 2020 4:06pm XREFS: REF-c-BB, CALLE JOAQUIN 2020 IMAGES: SLO emblem_bmp, mail_sp.jpg

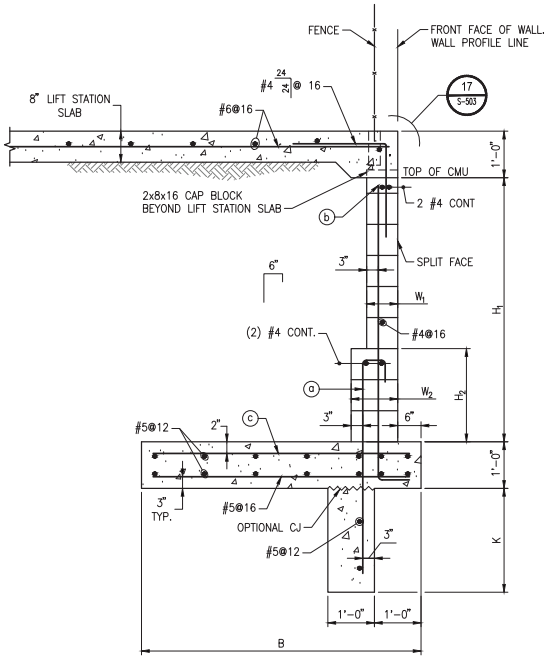

TYPICAL CMU WALL (1)
SCALE: 3/4" = 1'-0"

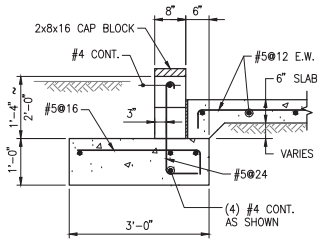

CMU WALL (A)
SCALE: 3/4" = 1'-0"

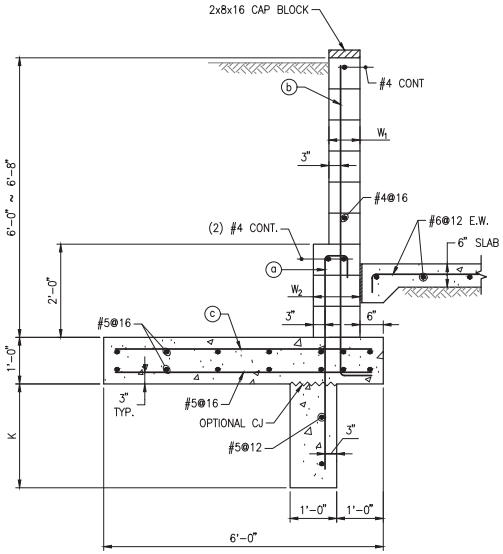

CMU WALL (B)
SCALE: 3/4" = 1'-0"

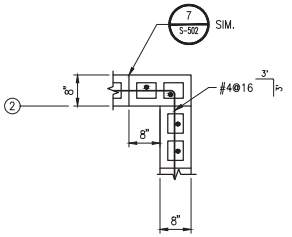

MCJ @ (2) (C)
SCALE: 3/4" = 1'-0"

CMU WALL SCHEDULE

WALL LOCATION	H_1	H_2	B	K	W_1 (1)	W_2 (2)	"a" BAR	"b" BAR	"c" BAR
(1) – (2)	VARIES, SEE NOTES BELOW								
(2) – (3)	5'-8"	2'-0"	6'-0"	2'-0"	8"	12"	#6@24	#5@24	#6@16
(3) – STEP *	5'-8"	2'-0"	6'-0"	2'-0"	8"	12"	#6@24	#5@24	#6@16
* STEP – (4)	5'-0"	2'-0"	6'-0"	2'-0"	8"	12"	#5@24	#5@24	#6@16
(4) – (6)	5'-4"	2'-0"	6'-0"	2'-0"	8"	12"	#5@24	#5@24	#6@16
(6) – (8)	4'-8"	~	5'-0"	1'-0"	8"	~	~	#6@16	#6@16
(8) – (9)	4'-0"	~	5'-0"	1'-0"	8"	~	~	#6@16	#6@16
(9) – STEP *	3'-4"	~	4'-0"	1'-0"	8"	~	~	#5@24	#5@16
* STEP – (10)	2'-8"	~	3'-6"	~	8"	~	~	#5@24	#5@16
(10) – (11)	2'-8"	~	3'-6"	~	8"	~	~	#5@24	#5@16
(a)	1-4"	~	3'-0"	~	8"	~	~	#5@24	#5@16
(b)	6'-8"	2'-0"	6'-0"	2'-0"	8"	12"	#6@16	#6@16	#6@8

(1) 8 X 8 X 16

(2) 12 X 8 X 16

* STEP IN FOOTING

Know what's below. Call before you dig.

CITY OF SAN LUIS OBISPO

PROJECT TITLE: CALLE JOAQUIN LIFT STATION REPLACEMENT

SHEET TITLE: WALL SECTIONS

REGISTERED PROFESSIONAL ENGINEER DANIEL S. CROSSLEY No. 73077 CIVIL STATE OF CALIFORNIA

DESIGNED BY: DC
DRAWN BY: NR
CHECKED BY:
APPROVED BY:
SCALE: SEE DWG
DATE: OCTOBER 2020
CITY SPECIFICATION NO. 91133
DRAWING NO. S-103
SHEET NO. 40 of 56

DWG: \\USSWFIPPSPWO01\Data\Work\city of san luis obispo\60225711 - calle joaquin lift station\WOD_cost_sph\02-sheets\SHT-S-103.dwg USER: GhBenbacoD
DATE: Dec 07, 2020 4:06pm XREFS: REF-c-BR, CALLE JOAQUIN 2020 IMAGES: SLO emblem_bmp, map_sc.tif

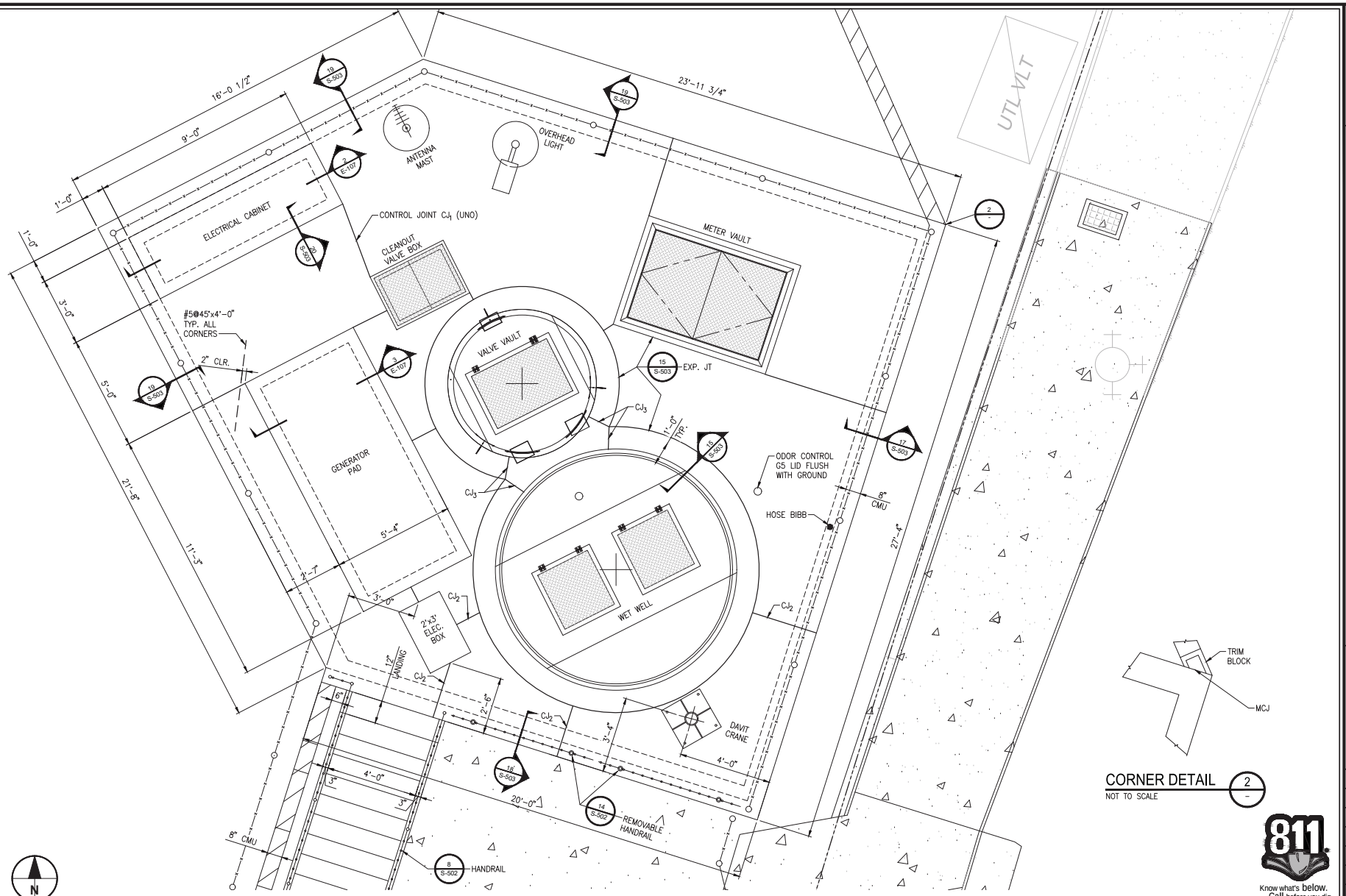

SLAB PLAN
SCALE: 1/2" = 1'-0"

CORNER DETAIL
NOT TO SCALE

Know what's below. Call before you dig.

CITY OF SAN LUIS OBISPO

PROJECT TITLE: CALLE JOAQUIN LIFT STATION REPLACEMENT

SHEET TITLE: CONCRETE SLAB PLAN

REGISTERED PROFESSIONAL ENGINEER DANIEL S. CROSSLEY No. 73077 CIVIL STATE OF CALIFORNIA

DESIGNED BY:	DC
DRAWN BY:	NR
CHECKED BY:	
APPROVED BY:	
SCALE:	SEE DWG
DATE:	OCTOBER 2020
CITY SPECIFICATION NO.	91133
DRAWING NO.	S-104
SHEET NO.	41 of 56

DWG: \\USSWFPPSRWO1\Data\Work\city of san luis obispo\60225711 - calle joaquin lift station\WD_cnst_pln\02-sheets\SHT-S-104.dwg USER: tjhibrand<cd>
DATE: Dec 07, 2020 4:00pm XREFS: REF-C_TP REF-C_SP REF-C_LP REF-C_UP REF-C_EP REF-C_BS CALLE JOAQUIN 2020 IMAGES: SLO embem_bmp_med_pc.tif

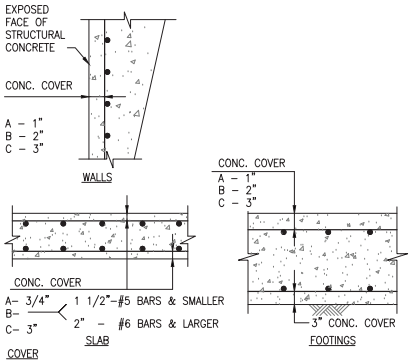

COVER

A. NO EXPOSURE TO GROUND, WEATHER, OR WATER AFTER FORM REMOVAL.*

B. EXPOSURE TO GROUND , WEATHER, OR WATER AFTER FORM REMOVAL.

C. CONCRETE PLACED AGAINST SOIL.

CONCRETE COVER OVER REINFORCING STEEL (1)

NOT TO SCALE

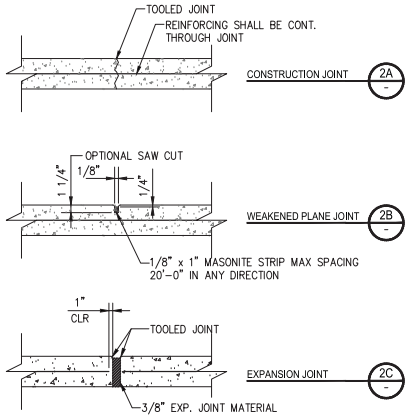

SIDEWALK SLAB JOINTS (2)

NOT TO SCALE

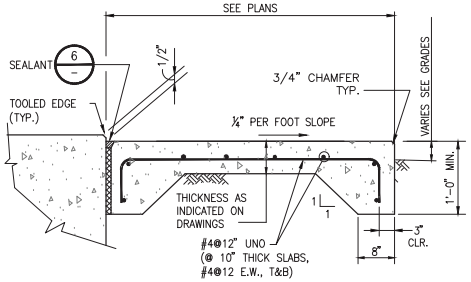

THICKENED EDGE SLAB ON GRADE (3)

NOT TO SCALE

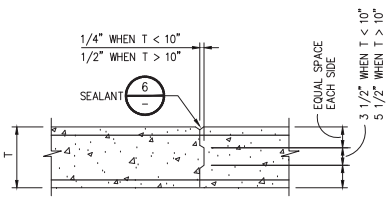

SECTION
SLAB

CONSTRUCTION JOINT CJ3 (4)

NOT TO SCALE

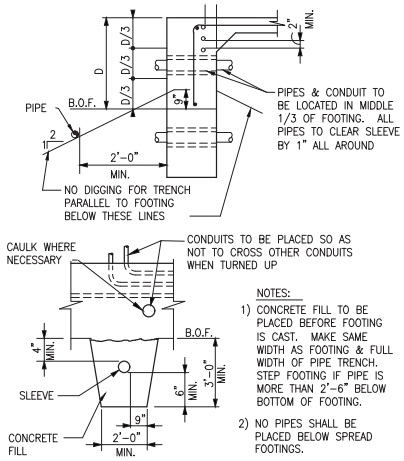

NOTES:

1) CONCRETE FILL TO BE PLACED BEFORE FOOTING IS CAST. MAKE SAME WIDTH AS FOOTING & FULL WIDTH OF PIPE TRENCH. STEP FOOTING IF PIPE IS MORE THAN 2'–6" BELOW BOTTOM OF FOOTING.

2) NO PIPES SHALL BE PLACED BELOW SPREAD FOOTINGS.

CONCRETE FOOTING AT PIPES AND CONDUITS (5)

NOT TO SCALE

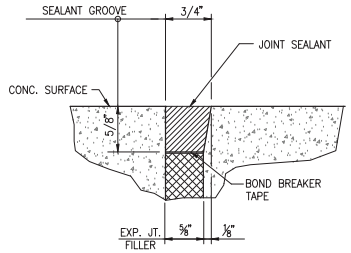

NOTE

1. SEE SPECIFICATIONS FOR SURFACE PREPARATION.

2. PRIME VERTICAL EDGES.

EXPANSION JOINT (6)

NOT TO SCALE

STRUCTURAL NOTES

GENERAL

1. THE CONTRACTOR SHALL VERIFY ALL DIMENSIONS BEFORE STARTING WORK AND SHALL IMMEDIATELY NOTIFY THE ENGINEER OF ANY DISCREPANCIES.
2. WHERE CONSTRUCTION DETAILS ARE NOT INDICATED OR NOTED FOR ANY PART OF THE WORK, DETAILS SHALL BE THE SAME AS FOR OTHER SIMILAR WORK AND TYPICAL DETAILS.
3. ALL CONSTRUCTION SHALL BE IN ACCORDANCE WITH THE CONSTRUCTION SPECIFICATIONS.
4. CONTRACTOR SHALL FOLLOW THE PROVISIONS OF THE 2010 UNIFORM BUILDING CODE, WITH AMENDMENTS.

FOUNDATIONS

1. REFER TO CONSTRUCTION SPECIFICATIONS FOR EARTHWORK AND FOUNDATION PREPARATION.

REINFORCED CONCRETE

1. CONCRETE SHALL HAVE A MINIMUM ULTIMATE COMPRESSIVE STRENGTH AT 28 DAYS OF 4000psi.
2. CEMENT SHALL BE PORTLAND CEMENT TYPE II/V.
3. THE MAXIMUM NOMINAL AGGREGATE SIZE SHALL BE 3/4" FOR SLAB, 1" FOR FOOTINGS.
4. THE MAXIMUM SLUMP SHALL BE IN ACCORDANCE WITH THE SPECIFICATIONS.
5. CONSTRUCTION JOINTS SHALL BE LOCATED AS SHOWN ON DRAWINGS. ADDITIONAL JOINTS REQUIRED FOR CONSTRUCTION SHALL BE SUBMITTED TO THE ENGINEER FOR REVIEW.
6. REINFORCING STEEL SHALL BE DEFORMED BARS CONFORMING TO ASTM A615 GRADE 60.
7. BARS SHALL BE CUT AND BENT IN ACCORDANCE WITH THE PROVISIONS OF ACI 318.
8. PROVIDE 3/4" CHAMFER AT ALL EXPOSED CONCRETE EDGES AND CORNERS U.O.N.
9. UNLESS OTHERWISE DETAILED, PROVIDE 3/8" DIAMETER SPACER BARS OR TIES AT 24" ON CENTER TO KEEP REINFORCING IN PLACE.
10. NO PIPE OR DUCTS SHALL BE PLACED IN CONCRETE SLABS OR FOOTINGS UNLESS SPECIFICALLY DETAILED.
11. ADDITIONAL CONSTRUCTION JOINTS TO FACILITATE CONSTRUCTION MAY BE ADDED AT NO COST TO THE OWNER AND AS PERMITTED BY OWNER'S REPRESENTATIVE.
12. SECURE ITEMS TO BE EMBEDDED IN CONCRETE PRIOR TO PLACING CONCRETE.
13. MINIMUM REINFORCING FOR ALL SLABS IS #6@12" PLACED AT THE ℄ OF THE SLAB.

MASONRY

1. CONCRETE MASONRY UNITS: ASTM C–90, MEDIUM WEIGHT.
2. GROUT ALL CELLS.
3. TIE AND SET EMBEDDED ANCHORS IN PLACE PRIOR TO GROUTING WALL.
4. MINIMUM LAP LENGTH FOR REBAR IS 48 BAR DIAMETERS.

STRUCTURAL AND MISCELLANEOUS STEEL

1. MATERIALS SHALL CONFORM TO THE FOLLOWING SPECIFICATIONS:

W SHAPES	ASTM 992
OTHER SHAPES, PLATES, ETC.	ASTM A36
MACHINE BOLTS	ASTM A307

2. BOLT HOLES SHALL BE 1/16" LARGER THAN THE BOLT.
3. ALL WASHERS ON ANCHOR BOLTS SHALL BE 2 1/4" OD MIN.

DESIGN DATA

CBC 2013
ACI 530–11
ACI 318–11

SEISMIC DESIGN DATA

S_s = 1.52g S_1 = 0.555g
F_a = 1.0 F_v = 2.40
S_{DS}=0.913g S_{D1} = 0.899g
SEISMIC DESIGN CATEGORY = D
SITE CLASS = E
RISK CATEGORY = III

WIND LOADS:

ASCE 7–10 BASIC WIND SPEED V_3 = 115 MPH EXPOSURE C

EARTHWORK

1. SEE SPECIFICATIONS AND DRAWINGS.

SPECIAL INSPECTION

1. SEE SPECIAL INSPECTION ON S–504

ANCHOR BOLT

1. DRILLED ANCHORS SHALL BE ICC SEISMIC APPROVED WEDGE ANCHORS. MANUFACTURER SHALL BE HILTI KWIK BOLT 3 SS TYPE 316 OR EQUAL.
2. EPOXY ANCHORS SHALL BE ICC APPROVED GROUTED EPOXY ANCHORS HILTI RE500 V3 OR EQUAL. BOLTS SHALL BE ASTM A 193.
3. ALL EQUIPMENT AND MOTORS SHALL BE ANCHORED WITH CAST–IN–PLACE ANCHOR BOLTS.

811 Know what's below. Call before you dig.

CITY OF SAN LUIS OBISPO

CALLE JOAQUIN LIFT STATION REPLACEMENT

STRUCTURAL DETAILS - 1

PROJECT TITLE:

SHEET TITLE:

REGISTERED PROFESSIONAL ENGINEER DANIEL S. CROSSLEY No. 73077 CIVIL STATE OF CALIFORNIA

DESIGNED BY:	DC
DRAWN BY:	NR
CHECKED BY:	
APPROVED BY:	
SCALE:	SEE DWG
DATE:	OCTOBER 2020
CITY SPECIFICATION NO.	91133
DRAWING NO.	S-501
SHEET NO.	42 of 56

DWG: \\cabef\cityjoan01\data\work\city of san luis obispo\60229711 – calle joaquin lift station\900_cad_gis\02–sheets\S501–S–501.dwg USER: dhlandusaD
DATE: Dec 07, 2020 4:06pm IMAGES: SLO emblem_temp_mod_ac.tif
XREFS: XEF–C–BB; CALLE JOAQUIN 2020

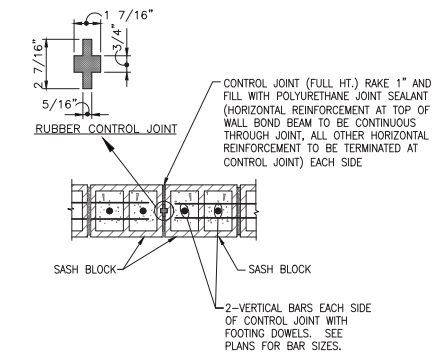

CONTROL JOINT (7)

NOT TO SCALE

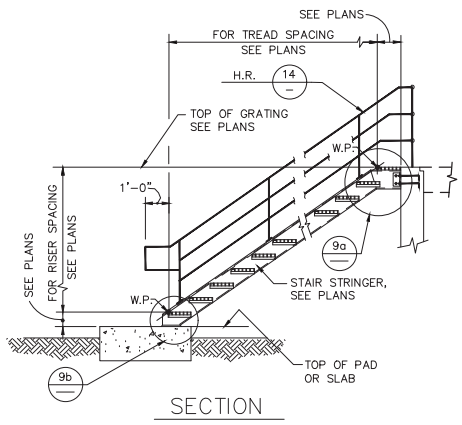

TYPICAL STAIR (8)

NOT TO SCALE

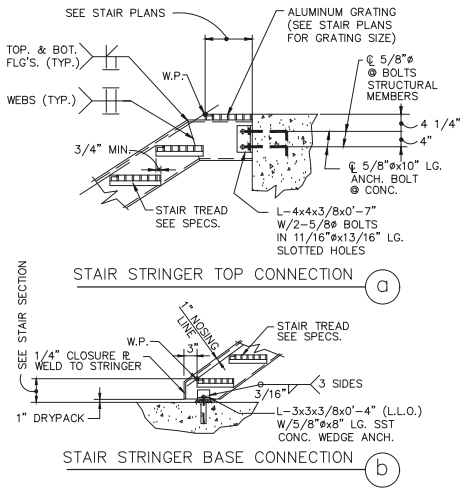

TYPICAL STAIR (9)

NOT TO SCALE

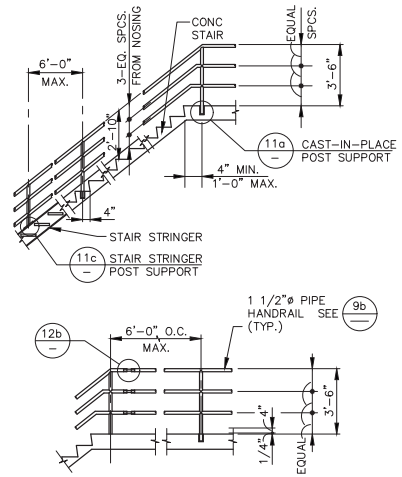

HANDRAILS (10)

NOT TO SCALE

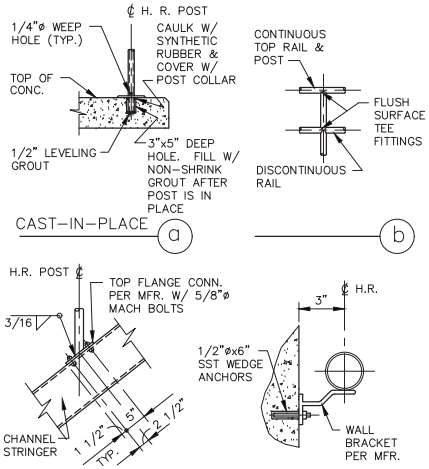

HANDRAIL DETAILS (11)

NOT TO SCALE

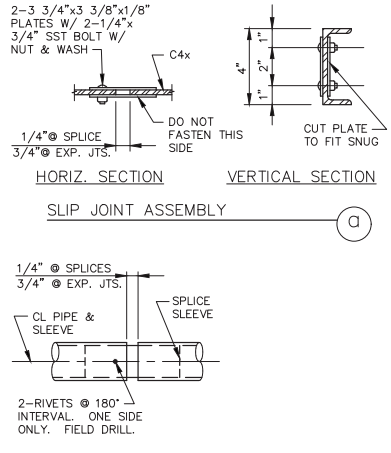

HANDRAIL DETAILS (12)

NOT TO SCALE

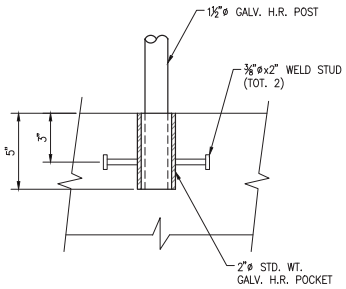

REMOVABLE HANDRAIL POST POCKET (13)

NOT TO SCALE

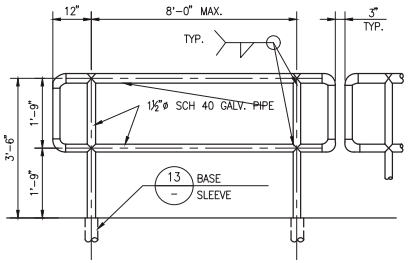

NOTES:

1. GRIND SMOOTH ALL ROUGH SURFACES BEFORE GALV.
2. POST AND RAIL TO BE SCHEDULE 40

REMOVEABLE HANDRAIL (14)

NOT TO SCALE

811 Know what's below. Call before you dig.

CITY OF SAN LUIS OBISPO

CALLE JOAQUIN LIFT STATION REPLACEMENT

STRUCTURAL DETAILS - 2

PROJECT TITLE:

SHEET TITLE:

REGISTERED PROFESSIONAL ENGINEER DANIEL S. CROSSLIN No. 73077 CIVIL STATE OF CALIFORNIA

DESIGNED BY:	DC
DRAWN BY:	NR
CHECKED BY:	
APPROVED BY:	
SCALE:	SEE DWG
DATE:	OCTOBER 2020
CITY SPECIFICATION NO.	91133
DRAWING NO.	S-502
SHEET NO.	43 of 56

DWG: \\cabal\cityeud01\data\wrk\city of san luis obispo\60229711 - calle joaquin lift station\900_cad_gis\02-wheels\Sht-S-502.dwg USER: dhilandusd
DATE: Dec 07, 2020 4:06pm XREFS: REF-C-BR CALLE JOAQUIN 2020 IMAGES: SLO emblem_bmp_mod_sc.tif

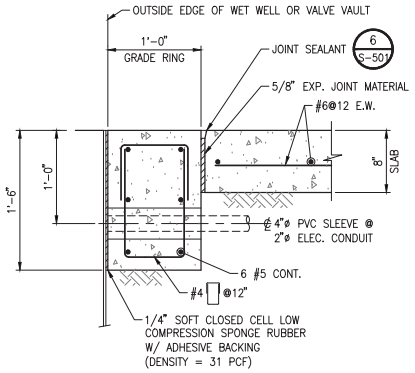

COLLAR BEAM

SCALE: 1 1/2" = 1'-0"

15 / -

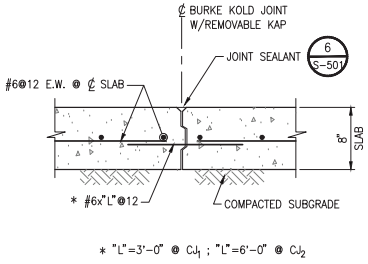

CONSTRUCTION JOINT CJ_2

SCALE: 1 1/2" = 1'-0"

16 / -

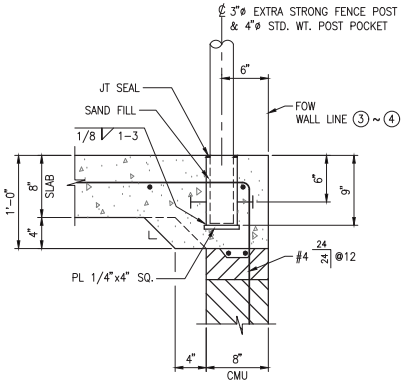

TYP. FENCE POST & POCKET @ LIFT STATION SLAB

SCALE: 1 1/2" = 1'-0"
NOTE: CMU WALL BELOW

17 / -

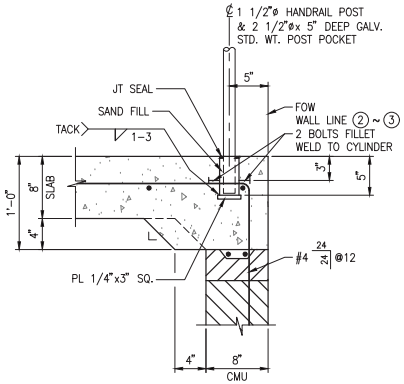

REMOVABLE HANDRAIL POSTS

SCALE: 1 1/2" = 1'-0"

18 / -

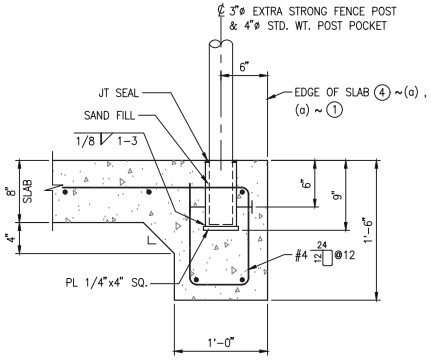

PERIMETER FENCE

SCALE: 1 1/2" = 1'-0"
NOTE: NO CMU WALL BELOW

19 / -

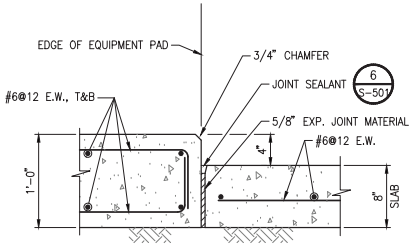

EDGE OF EQUIPMENT PAD DETAIL

SCALE: 1 1/2" = 1'-0"

20 / -

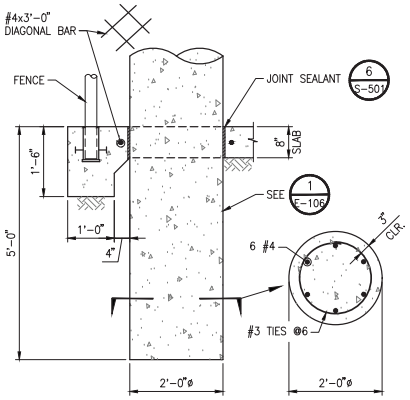

LIGHT POLE FOOTING

SCALE: 3/4" = 1'-0"

21 / -

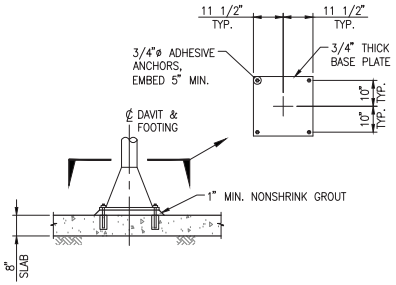

DAVIT FOOTING

SCALE: 1/2" = 1'-0"

22 / -

811
Know what's below.
Call before you dig.

CITY OF SAN LUIS OBISPO

CALLE JOAQUIN LIFT STATION REPLACEMENT

STRUCTURAL DETAILS - 3

PROJECT TITLE:

SHEET TITLE:

REGISTERED PROFESSIONAL ENGINEER
DANIEL S. CROSSLEY
No. 73077
CIVIL
STATE OF CALIFORNIA

DESIGNED BY:	DC
DRAWN BY:	NR
CHECKED BY:	
APPROVED BY:	
SCALE:	SEE DWG
DATE:	OCTOBER 2020
CITY SPECIFICATION NO.	91133
DRAWING NO.	S-503
SHEET NO.	44 of 56

DWG: \\cslsbf\cityauto01\data\wwr\city of san luis obispo\60229711 - calle joaquin lift station\900_cad_gis\02-sheets\S#1-S-503.dwg USER: dhilandusa3D
DATE: Dec 07, 2020 4:06pm IMAGES: SLO emblem, bmp, mad_ac.tif
XREFS: REF-C-BB; CALLE JOAQUIN 2020

TESTS AND SPECIAL INSPECTIONS

STRUCTURAL TESTS AND INSPECTIONS WILL BE PROVIDED BY THE OWNER OR DESIGNATED QUALIFIED TESTING LABORATORY CONFORMING TO THE REQUIREMENTS OF SECTION 1704 OF THE 2013 CBC.

SPECIFIED CONCRETE TESTING DURING CONSTRUCTION WILL BE PROVIDED BY THE OWNER OR DESIGNATED TESTING LABORATORY. SPECIFIED LABORATORY TEST MIXES SHALL BE THE RESPONSIBILITY OF THE CONTRACTOR.

TESTS	INSPECTIONS
☒ FILL MATERIAL	☒ GRADING, EXCAVATION, AND FILL
☒ FILL COMPACTION	☐ PILE/PIER INSTALLATION
☒ REINFORCING STEEL	☒ REINFORCEMENT PLACEMENT
☒ CONCRETE	☒ CONCRETE PLACEMENT
☐ STRUCTURAL STEEL	☐ SHOP WELDING
☒ MASONRY GROUT	☒ FIELD WELDING
☐ MASONRY	☐ HIGH STRENGTH BOLTING
☒ GROUT AND MORTAR	☒ MASONRY PLACEMENT AND
☒ EPOXY AND EXPANSION ANCHORS	☒ GROUTING
☐ SHOTCRETE	☒ EPOXY AND EXPANSION ANCHORS
	☐ SHOTCRETE
	☒ ANCHOR BOLT SIZE AND PLACEMENT

SPECIAL INSPECTION:

1. EARTHWORK AND GRADING
2. PLACEMENT OF REINFORCING
3. CONCRETE PLACEMENT
4. ANCHOR BOLTS
5. ALUMINUM AND STEEL SITE FABRICATION & WELDING

TESTS AND INSPECTIONS

NO SCALE

ADHESIVE ANCHORS (HILTI) NOTES

1. ADHESIVE ANCHORS SHALL BE "HILTI HIT-RE 500 V3" ADHESIVE ANCHORS FOR CONCRETE AS MANUFACTURED BY HILTI, INC.
2. STAINLESS STEEL THREADED ROD FOR ADHESIVE ANCHORS SHALL CONFORM TO ASTM F593, TYPE 316 (CW). STAINLESS STEEL NUTS FOR ADHESIVE ANCHORS SHALL CONFORM TO ASTM F594, TYPE 316 (CW).
3. ANCHORS SHALL BE INSTALLED IN ACCORDANCE WITH ICC EVALUATION REPORT No. 3814.
4. SPECIAL INSPECTION PER CHAPTER 17 OF THE CBC SHALL BE PROVIDED DURING ANCHOR INSTALLATION.
5. AN ALTERNATIVE ADHESIVE ANCHOR PRODUCT MAY BE SUBMITTED TO THE ENGINEER FOR APPROVAL, PROVIDED THAT IT HAS A CURRENT ICC EVALUATION REPORT APPROVAL.
6. ALL ABANDONED HOLES SHALL BE FILLED WITH A DRYPACK GROUT WITH A MINIMUM 28-DAY COMPRESSIVE STRENGTH OF 5,000 PSI. THE FILLED HOLE(S) SHALL BE PREPARED AND CLEANED AS REQUIRED BY THE GROUT MANUFACTURER.
7. LOCATE EXISTING REINFORCING USING A NON-DESTRUCTIVE METHOD (PACHOMETER OR OTHER), PRIOR TO DRILLING HOLES FOR ANCHORS. MAINTAIN A MINIMUM CLEARANCE OF 1" BETWEEN THE REINFORCEMENT AND THE ANCHOR.
8. CONCRETE IN WHICH ADHESIVE ANCHORS ARE INSTALLED SHALL HAVE A MINIMUM AGE OF 21 DAYS AT TIME OF ANCHOR INSTALLATION.

STRUCTURAL TESTS, INSPECTIONS, AND OBSERVATIONS

1. PER THE CBC TITLE 24, 2013 EDITION, THE FOLLOWING ITEMS SHALL BE INSPECTED AND TESTED BY A SPECIAL INSPECTOR.
2. ALL SPECIAL TESTS AND INSPECTIONS SHALL BE PERFORMED BY A SPECIAL INSPECTOR FIRM OR INDIVIDUAL PER CBC SECTION 1704. THE SPECIAL INSPECTOR SHALL BE EMPLOYED BY THE OWNER, BUT NOT BY THE CONTRACTOR OR ANY OTHER PERSON RESPONSIBLE FOR THE WORK.
3. THE SPECIAL INSPECTOR SHALL BE A QUALIFIED (LICENSED) PERSON WHO SHALL DEMONSTRATE COMPETENCE TO THE SATISFACTION OF THE BUILDING OFFICIAL, FOR INSPECTION OF THE PARTICULAR TYPE OF CONSTRUCTION OR OPERATION REQUIRING SPECIAL INSPECTION.
4. EXCEPT AS MENTIONED IN THE GENERAL CONDITIONS REGARDING RE-TESTING DEFICIENT WORK, THE OWNER SHALL PAY FOR ALL INITIAL AND ONE RETEST NECESSARY TO MEET THE CBC CODE REQUIREMENTS. THE CONTRACTOR SHALL PAY FOR ALL TESTS REQUIRED FOLLOWING THE RETEST. THE TESTING AGENCY SHALL SUBMIT COPIES OF ALL TEST REPORTS TO THE OWNER AND STRUCTURAL ENGINEER OF RECORD.
5. THE FABRICATOR SHALL ALLOW UNRESTRICTED ACCESS FOR INSPECTION BY THE OWNER OR HIS REPRESENTATIVE. FEES FOR SPECIFICALLY REQUESTED NON-VISUAL INSPECTION WILL BE PAID BY THE OWNER.

LIST OF SPECIAL INSPECTION	YES	NO	N/A
FOUNDATION:			
A. GRADING AND FILLING AND CUT OPERATION PER SOILS REPORT	X		
B. FILL MATERIAL ACCEPTANCE TEST, COMPACTION CONTROL	X		
BEARING CAPACITY OF COMPACTED FILL	X		
CONCRETE:			
A. DURING THE TAKING OF TEST SPECIMENS	X		
PLACING OF REINFORCED CONCRETE	X		
B. SHOTCRETE			X
C. BOLT INSTALLED IN CONCRETE	X		
REINFORCING STEEL:			
A. DURING PLACING OF REINFORCING	X		
B. DURING STRESSING OF POST TENSIONED CONCRETE ELONGATE JACKING FORCE LIFT-OFF FOR EVERY 18TH TENDON			X
C. SAMPLE AND TEST BAR STEEL & POST-TENSION CABLE			X
STRUCTURAL STEEL:			
A. MILL REPORTS AND IDENTIFICATION OF STEEL (AFADAVIT OF COMPLIANCE)			X
B. SAMPLING AND TESTING OF SPECIMEN		X	X
WELDING:			
A. ALL STRUCTURAL WELDING (INCLUDES DECKING AND WELDED STUDS)			X
B. ULTRASONIC TESTING OF FULL PENETRATION WELD CONNECTIONS AT MOMENT FRAMES, BRACED FRAMES, BEAM SPLICES, AND FIELD WELDS			X
C. STRUCTURAL LIGHT GAGE METAL FRAME WELDING			X
D. REINFORCING STEEL WELDING PER CBC 1704A.4.2			X
BOLT:			
A. EXPANSION/ ADHESIVE ANCHORS IN CONCRETE OR MASONRY INSTALLATION AND TESTING	X		
B. ANCHOR BOLTS AT CONCRETE WALLS AND BRACED FRAMES. (BOLT INSTALLATION AND CONCRETE PLACEMENT)	X		

TABLE 1704.5.3: REQUIRED VERIFICATION AND INSPECTION OF MASONRY:

INSPECTION TASK	FREQUENCY OF INSPECTION: CONTINUOUS DURING TASK LISTED	FREQUENCY OF INSPECTION: PERIODICALLY DURING TASK LISTED
1. COMPLIANCE WITH REQUIRED INSPECTION PROVISIONS OF THE CONTRACT DOCUMENTS AND THE APPROVED SUBMITTALS.	—	X
2. VERIFICATION OF f'_m AND f'_{AC} PRIOR TO CONSTRUCTION AND FOR EVERY 5,000 SQUARE FEET DURING CONSTRUCTION.	—	X
3. VERIFICATION OF PROPORTIONS OF MATERIALS IN PREMIXED OR PREBLENDED MORTAR AND GROUT AS DELIVERED TO THE SITE.	—	X
4. VERIFICATION OF SLUMP FLOW AND PSI AS DELIVERED TO THE SITE FOR SELF-CONSOLIDATING GROUT.	X	—
5. THE FOLLOWING SHALL BE VERIFIED TO ENSURE COMPLIANCE:		
A. PROPORTIONS OF SITE-PREPARED MORTAR, GROUT AND PRESTRESSING GROUT FOR BONDED TENDONS	—	X
B. PLACEMENT OF MASONRY UNITS AND CONSTRUCTION OF MORTAR JOINTS	—	X
C. PLACEMENT OF REINFORCEMENT, CONNECTORS	—	X
D. GROUT SPACE PRIOR TO GROUTING.	X	—
E. PLACEMENT OF GROUT.	X	—
F. SIZE AND LOCATION OD STRUCTURAL ELEMENTS.	—	X
G. TYPE, AND LOCATION OF ANCHORS, INCLUDING OTHER DETAILS OF ANCHORAGE OF MASONRY TO STRUCTURAL MEMBERS, FRAMES OR OTHER CONSTRUCTION.	X	—
H. SPECIFIED SIZE, GRADE AND TYPE OF REINFORCEMENT, ANCHOR BOLTS.	—	X
I. WELDING OF REINFORCING BARS.	X	—
J. PREPARATION, CONSTRUCTION AND PROTECTION OF MASONRY DURING COLD WEATHER (TEMPERATURE BELOW 40°F) OR HOT WEATHER (TEMPERATURE ABOVE 90°F)..	—	X
6. PREPARATION OF ANY REQUIRED GROUT SPECIMENS AND/OR PRISMS SHALL BE OBSERVED:	X	—

TABLE 1704.4: REQUIRED VERIFICATION AND INSPECTION OF CONCRETE CONSTRUCTION

VERIFICATION AND INSPECTION	CONTINUOUS	PERIODIC	REFERENCED STANDARD a.	IBC REFERENCE
1. INSPECTION OF REINFORCING STEEL, INCLUDING PRESTRESSING TENDONS, AND PLACEMENT.	—	X	ACI 318: 3.5, 7.1-7.7	1913.4
2. INSPECTION OF REINFORCING STEEL WELDING IN ACCORDANCE WITH TABLE 1704.3, ITEM 5B.	—	—	AWS D1.4 ACI 318: 3.5.2	—
3. INSPECT BOLTS TO BE INSTALLED IN CONCRETE PRIOR TO AND DURING PLACEMENT OF CONCRETE WHERE ALLOWABLE LOADS HAVE BEEN INCREASED.	X	—	—	1911.5
4. VERIFYING USE OF REQUIRED DESIGN MIX.	—	X	ACI 318: CH. 4, 5.2-5.4	1904.2.2, 1913.2, 1913.3
5. AT THE TIME FRESH CONCRETE IS SAMPLED TO FABRICATE SPECIMENS FOR STRENGTH TESTS, PERFORM SLUMP AND AIR CONTENT TESTS, AND DETERMINE THE TEMPERATURE OF THE CONCRETE.	X	—	ASTM C 172 ASTM C 31 ACI 318: 5.6, 5.8	1913.10
6. INSPECTION OF CONCRETE AND SHOTCRETE PLACEMENT FOR PROPER APPLICATION TECHNIQUES.	X	—	ACI 318: 5.9, 5.10	1913.6, 1913.7, 1913.8
7. INSPECTION FOR MAINTENANCE OF SPECIFIED CURING TEMPERATURE AND TECHNIQUES.	—	X	ACI 318: 5.11-5.13	1913.9
8. INSPECTION OF PRESTRESSED CONCRETE:				
A. APPLICATION OF PRESTRESSING FORCES.	—	—	ACI 318: 18.20 ACI 318: 18.18.4	—
B. GROUTING OF BONDED PRESTRESSING TENDONS IN THE SEISMIC- FORCE-RESISTING SYSTEM.	—			
9. ERECTION OF PRECAST CONCRETE MEMBERS.	—	—	ACI 318: CH. 16	—
10. VERIFICATION OF IN-SITU CONCRETE STRENGTH, PRIOR TO STRESSING OF TENDONS IN post tensioned CONCRETE AND PRIOR TO REMOVAL OF SHORES AND FORMS FROM BEAMS AND STRUCTURAL SLABS.	—	—	ACI 318: 6.2	—
11. INSPECT FRAMEWORK FOR SHAPE, LOCATION AND DIMENSIONS OF THE CONCRETE MEMBER BEING FORMED	—	X	ACI 318: 6.1.1	—

a. WHERE APPLICABLE, SEE ALSO SECTION 1707.1, SPECIAL INSPECTION FOR SEISMIC RESISTANCE (NA)

TABLE 1704.7: REQUIRED VERIFICATION AND INSPECTION OF SOILS (BY GEOTECHNICAL ENGINEER)

VERIFICATION AND INSPECTION TASK	CONTINUOUS DURING TASK LISTED	PERIODICALLY DURING TASK LISTED
1. VERIFY MATERIALS BELOW FOOTINGS ARE ADEQUATE TO ACHIEVE THE DESIGN BEARING CAPACITY.	—	X
2. VERIFY EXCAVATIONS ARE EXTENDED TO PROPER DEPTH AND HAVE REACHED PROPER MATERIAL.	—	X
3. PERFORM CLASSIFICATION AND TESTING OF CONTROLLED FILL MATERIALS	—	X
4. VERIFY USE OF PROPER MATERIALS, DENSITIES AND LIFT THICKNESSES DURING PLACEMENT AND COMPACTION OF CONTROLLED FILL.	X	—
5. PRIOR TO PLACEMENT OF CONTROLLED FILL, OBSERVE SUBGRADE AND VERIFY THAT SITE HAS BEEN PREPARED PROPERLY.	—	X

Know what's below. Call before you dig.

CITY OF SAN LUIS OBISPO

PROJECT TITLE: CALLE JOAQUIN LIFT STATION REPLACEMENT

SHEET TITLE: SPECIAL INSPECTION

REGISTERED PROFESSIONAL ENGINEER DANIEL S. CROSSLEY No. 73077 CIVIL STATE OF CALIFORNIA

DESIGNED BY: DC
DRAWN BY: NR
CHECKED BY:
APPROVED BY:
SCALE: SEE DWG
DATE: OCTOBER 2020
CITY SPECIFICATION NO. 91133
DRAWING NO. S-504
SHEET NO. 45 of 56

DWG: \\sabel\rdpool01\data\work\city of san luis obispo\60229711 - calle joaquin lift station\900_cad_gis\02-sheets\SH1-S-504.dwg USER: dhilandsc3D
DATE: Dec 07, 2020 4:06pm XREFS: REF-C-BIG CALLE JOAQUIN 2020 IMAGES: SLO emblem, temp_mat_ac.tif

PLANS

LIGHTING AND RECEPTACLES

- 8 — NO. OF FIXTURES IN AREA
- A — FIXTURE TYPE
- 4/40 — FIXTURE IDENTIFICATION, NUMBER OF LAMPS/LAMP WATTAGE
- 8'-0" — MOUNTING HEIGHT
- FLUORESCENT LIGHTING FIXTURE (TYPE AND MOUNTING AS NOTED)
- LIGHTING FIXTURE (TYPE AND MOUNTING AS NOTED)
- LIGHTING FIXTURE (POLE OR STANCHION MOUNTED)
- EXIT LIGHT – ARROW INDICATES DIRECTION – DARK ENDED QUADRANT INDICATES FACE ILLUMINATED
- EMERGENCY LIGHTING UNIT (BATTERY POWERED)
- 2 — TOGGLE SWITCH SUBSCRIPT INDICATES CIRCUIT CONTROLLED SUPERSCRIPT INDICATES: BLANK–1 POLE, 20A, 120V, 2–2 POLE, 20A, 120V, 3–3 WAY, 20A, 120V, K–KEY OPERATED, P–WITH PILOT LIGHT, M–3 POSITION MOMENTARY CONTACT, CENTER "OFF", OR MANUAL MOTOR STARTER
- F — DUPLEX CONVENIENCE RECEPTACLE, 2 POLE, 3 WIRE, 120V, MOUNTING HEIGHT + 18", UON. F–INDICATES FLOOR MOUNTED, H–INDICATES HAZARDOUS AREA EXPLOSION PROOF, WP–OUTDOOR WEATHER PROOF
- SINGLE CONVENIENCE RECEPTACLE
- RECEPTACLE (RATINGS AS SHOWN ON DRAWINGS)
- 480 VOLT RECEPTACLE, 60A, 600 VOLTS AC, 3W, 4P (H–INDICATES HAZARDOUS AREA EXPLOSION PROOF)
- PANEL
- E — DEVICE MOUNTED ON CONTROL STATION MOUNTING STAND

POWER AND CONDUIT

- LINE SWITCH DISCONNECT (30A, 3P NON–FUSED UNLESS OTHERWISE NOTED)
- CONDUIT RUN, CONCEALED IN CEILING
- CONDUIT RUN, EXPOSED
- CONDUIT RUN, IN SLAB, IN WALL, OR BELOW GRADE
- CONDUIT RUN, FULL STROKE DESIGNATES PHASE WIRE, HALF STROKE INDICATES NEUTRAL WIRE, CONDUIT FILL PER CODE OR MINIMUM SIZE CONDUIT AS PERMITTED ON PLANS OR SPECIFICATIONS, GROUND CONDUCTOR AS REQUIRED IN SPECIFICATIONS
- (10) — CONDUIT RUN, NUMBER IN PARENTHESIS INDICATES WIRE SIZE OTHER THAN #12
- A–1,3 — CONDUIT HOMERUN TO PANEL "A" CIRCUITS 1&3 (COMMON NEUTRAL)
- CONDUIT SEAL–HORIZONTAL OR VERTICAL TYPE AS REQUIRED, COMPOUND FILLED

POWER AND CONDUIT CONTINUED

- CONDUIT BENDS AWAY FROM OBSERVER
- CONDUIT BENDS TOWARD OBSERVER
- CONDUIT RUN – CHANGE IN ELEVATION
- T — CONDUIT, T–TELEPHONE, PA–INTERCOM, SIZE AS NOTED
- G — GROUND WIRE, SIZE AS NOTED
- XXXXX — CONDUIT NO. SEE CONDUIT/CABLE SCHEDULE
- GROUND CONNECTION, BOLTED TYPE
- GROUND CONNECTION, EXOTHERMIC TYPE
- FLEXIBLE CONDUIT CONNECTION
- GROUND ROD, 3/4" X 10'–0" COPPERCLAD AND WELL (UNLESS OTHERWISE NOTED)
- MAGNETIC MOTOR STARTER
- CONDUITS IN CONDUIT RACK
- DUCTBANK, OR DUCTBANKS CONCRETE ENCASED (YARD RUN, SEE DETAIL)
- PG & E — DUCTBANK FOR PG & E 12KV DISTRIBUTION LINE (SEE DWG E8, NOTE 4)
- J — JUNCTION BOX (H–INDICATES HAZARDOUS AREA EXPLOSION PROOF)
- M 2 — MOTOR (NUMBER INDICATES HORSEPOWER)
- FIELD MOUNTED INSTRUMENT
- CONTROL STATION, SUBSCRIPT INDICATES FUNCTION S/S–START/STOP, S/LOS–START/LOCK–OUT–STOP, J–JOG, T/LOS–TEST/LOCK–OUT–STOP, R–RESET
- COMBINATION MAGNETIC MOTOR STARTER

COMMUNICATIONS AND MISCELLANEOUS

- BELL
- ALARM HORN
- SPEAKER
- E — ELECTRICAL DEVICE OR OUTLET AS NOTED ON DRAWINGS
- T — THERMOSTAT, MTG HT +5'–0" UON
- SOUND POWERED TELEPHONE OUTLET
- TELEPHONE OUTLET
- S — PAGING HANDSET

CONTROL DIAGRAMS

- OFF ON — ON–OFF SWITCH
- LOS — NORMALLY CLOSED PUSHBUTTON, MOMENTARY TYPE, LOS–LOCK–OUT–STOP
- NORMALLY OPEN PUSHBUTTON, MOMENTARY TYPE
- CR1 — NORMALLY OPEN INTERLOCK (CR1 DENOTES THAT CONTACT IS ASSOCIATED WITH CONTROL RELAY #1)
- CR1 — NORMALLY CLOSED INTERLOCK (CR1 DENOTES THAT CONTACT IS ASSOCIATED WITH CONTROL RELAY #1)

CONTROL DIAGRAMS CONTINUED

- MR — MOTOR STARTER CONTACTOR
- CR 1 — RELAY, AR–ALARM, CR–CONTROL, TR–TIME DELAY, NUMBER IDENTIFIES RELAY
- 21 — RELAY DEVICE, NUMBER REFERS TO AMERICAN STANDARD DEVICE FUNCTION NUMBER
- SOLENOID VALVE
- THERMAL OVERLOAD RELAY
- MOTOR SPACE HEATER
- ETM — ELAPSED TIME METER
- POTENTIOMETER
- SURGE SUPRESSOR
- MTR — MOTOR
- KWH — KILOWATT HOUR METER OR VAR–VARMETER (KW–KILOWATTMETER)
- A — A–AMMETER, V–VOLTMETER
- AS — SWITCH, A–AMMETER, V–VOLTMETER
- CLF — FUSE (CLF INDICATES CURRENT LIMITING FUSE)
- FUSE WITH BLOWN FUSE INDICATOR
- R — INDICATING LIGHT : R=RED, G=GREEN, A=AMBER, W=WHITE, B=BLUE, P=PINK
- CONDUCTOR, CONNECTED
- CONDUCTOR, NOT CONNECTED
- 3 POSITION SELECTOR SWITCH
- 2 POSITION SELECTOR SWITCH
- PRESSURE SWITCH
- LIMIT SWITCH
- TEMPERATURE SWITCH

SINGLE LINES

- TRANSFORMER
- 600/5 3 — CURRENT TRANSFORMER (3 INDICATES NUMBER OF CT'S, 600/5 INDICATES XFMR RATIO)
- 3 — POTENTIAL (VOLTAGE) TRANSFORMER (3 INDICATES NUMBER OF PT'S)
- TRANSFORMER CONNECTION (DELTA–WYE W/ GROUNDED NEUTRAL)
- INCOMING LINE
- CONNECTOR, PLUG DRAW OUT TYPE
- 52 — DRAW OUT TYPE POWER CIRCUIT BREAKER
- STRESS CONE
- POTHEAD
- TEST DEVICE
- CAPACITOR
- BATTERY
- K — KIRK–KEY INTERLOCK
- UNIT CB 100 30 — THERMAL MAGNETIC BREAKER, 100 INDICATES FRAME SIZE, 30 INDICATES TRIP AMPS, 3 POLE UNLESS OTHERWISE NOTED
- UNIT MCP 3 MCP — MOTOR CIRCUIT PROTECTOR 3 INDICATES CONTINUOUS RATING, 3 POLE UNLESS OTHERWISE NOTED
- 1 — FULL VOLTAGE, NON–REVERSING MAGNETIC MOTOR STARTER, 1 INDICATES NEMA SIZE.. SEE SPECIFICATIONS FOR TYPE OF BRANCH CIRCUIT PROTECTION
- AC COMBINATION FULL VOLTAGE MAGNETIC STARTER, CIRCUIT BREAKER OR MOTOR CIRCUIT PROTECTOR TYPE AS SHOWN, REVERSIBLE
- AC COMBINATION FULL VOLTAGE MAGNETIC STARTER, CIRCUIT BREAKER OR MOTOR CIRCUIT PROTECTOR TYPE AS SHOWN, TWO SPEED, TWO WINDINGS
- SURGE PROTECTOR
- LIGHTNING ARRESTOR AND GROUND
- R — RESISTOR
- BUS DUCT
- 30A NF — DISCONNECT SWITCH, 30 INDICATES SWITCH CONTINUOUS RATING IN AMPS NF INDICATES NON FUSIBLE

CITY OF SAN LUIS OBISPO

PROJECT TITLE: **CALLE JOAQUIN LIFT STATION REPLACEMENT**

SHEET TITLE: ELECTRICAL LEGEND AND ABBREVIATIONS

REGISTERED PROFESSIONAL ENGINEER ALLEN J. RANDLE No. E9606 ELECTRICAL STATE OF CALIFORNIA

DESIGNED BY:	CU/NG
DRAWN BY:	DD
CHECKED BY:	AR
APPROVED BY:	
SCALE:	
DATE:	OCTOBER 2020
CITY SPECIFICATION NO.	91133
DRAWING NO.	E-101
SHEET NO.	46 of 56

DWG: \\cwh01\fpdata01\wkm\work\city of san luis obispo\0202711 – calle joaquin lift station\900_mod_cpk\0c-mech\SHT-E-101.dwg USER: DDesouza2D
DATE: Dec 07, 2020 - 4:00pm XREFS: REF-C-BG-CALLE JOAQUIN 2020 IMAGES: E-101.jpg SLD-WWTP-MECH-E-01.dwg

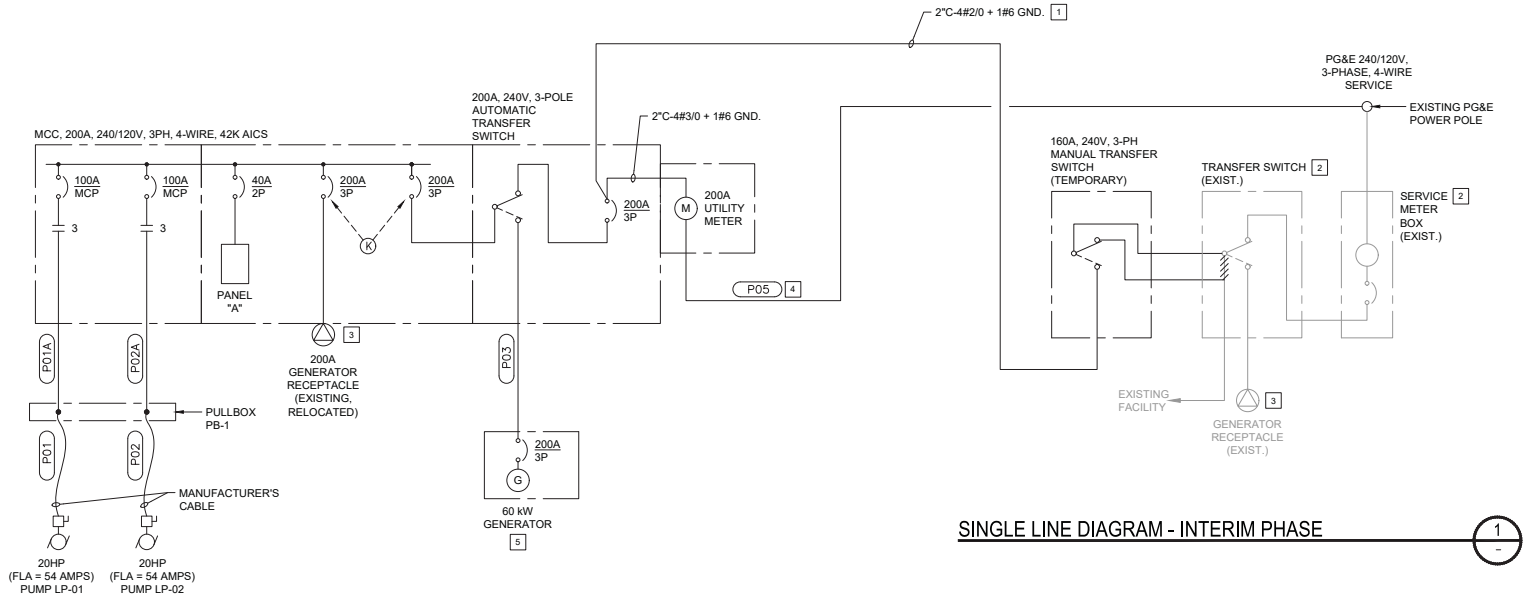

SINGLE LINE DIAGRAM - INTERIM PHASE 1 –

SINGLE LINE DIAGRAM - NEW FACILITY 2 –

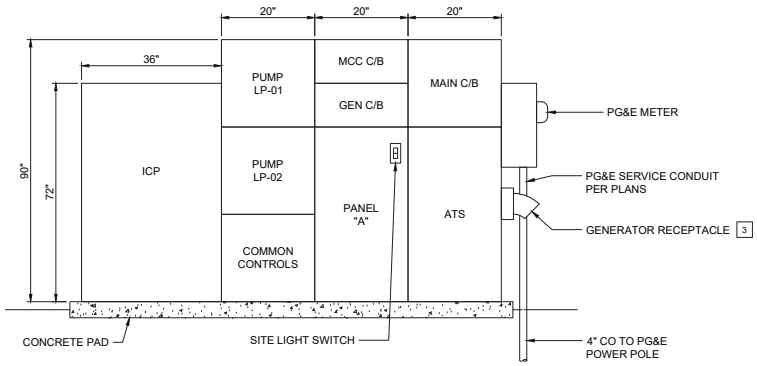

WP ENCLOSURE NOT SHOWN FOR CLARITY

MCC & ICP ELEVATION 3 –
NOT TO SCALE

LOAD SCHEDULE			
LOAD DESCRIPTION	HP	KVA	FLA
PUMP LP-01	20	21.5	
PUMP LP-02	20	21.5	
PANEL A		2	
SUB-TOTAL:		45	
25% OF LARGEST MOTOR:		5.4	
TOTAL:		50.4	121.4

NOTES:

1. PROVIDE CONDUIT AND WIRE FOR TEMPORARY POWER TO NEW MOTOR CONTROL CENTER. REMOVE TEMPORARY CONDUIT AND WIRE AFTER THE NEW FACILITY IS OPERATIONAL AND THE POWER SERVICE HAS BEEN INSTALLED BY PG&E.
2. REMOVE EXISTING ELECTRICAL EQUIPMENT AFTER PG&E HAS PROVIDED PERMANENT POWER.
3. RELOCATE EXISTING GENERATOR RECEPTACLE TO NEW PERMANENT INSTALLATION AS SHOWN ON DETAILS 2 AND 3.
4. EXTEND CONDUIT AND CABLES TO TOP OF POWER POLE. PROVIDE NEW WEATHERHEAD AND LEAVE 4' OF WIRE FOR CONNECTION TO PG&E OVERHEAD POWER LINES. REFER TO SHEET E-106, DETAIL 2.
5. DO NOT USE NEW GENERATOR FOR CONSTRUCTION OR FOR TEMPORARY POWER.

PROJECT TITLE: CALLE JOAQUIN LIFT STATION REPLACEMENT

SHEET TITLE: SINGLE LINE DIAGRAMS AND ELEVATION

REGISTERED PROFESSIONAL ENGINEER ALLEN J. RANDLE No. E9606 ELECTRICAL STATE OF CALIFORNIA

DESIGNED BY: CU/NG
DRAWN BY: DD
CHECKED BY: AR
APPROVED BY:
SCALE:
DATE: OCTOBER 2020
CITY SPECIFICATION NO. 91133
DRAWING NO. E-102
SHEET NO. 47 of 56

DWG: \\USWP1PPWWDT\Data\Work\ch_of_sm\lab_ch\ch\60125711 - calle joaquin (BI wwtr)\WD_cad_ch\D2-sheets\SHT-E-102.dwg USER: DHbrdsuc0
DATE: Dec 07, 2020 - 4:00pm XREFS: REF-E-BL CALLE JOAQUIN 2020 IMAGES: SLD_wetwell_lift_station_v02.tif

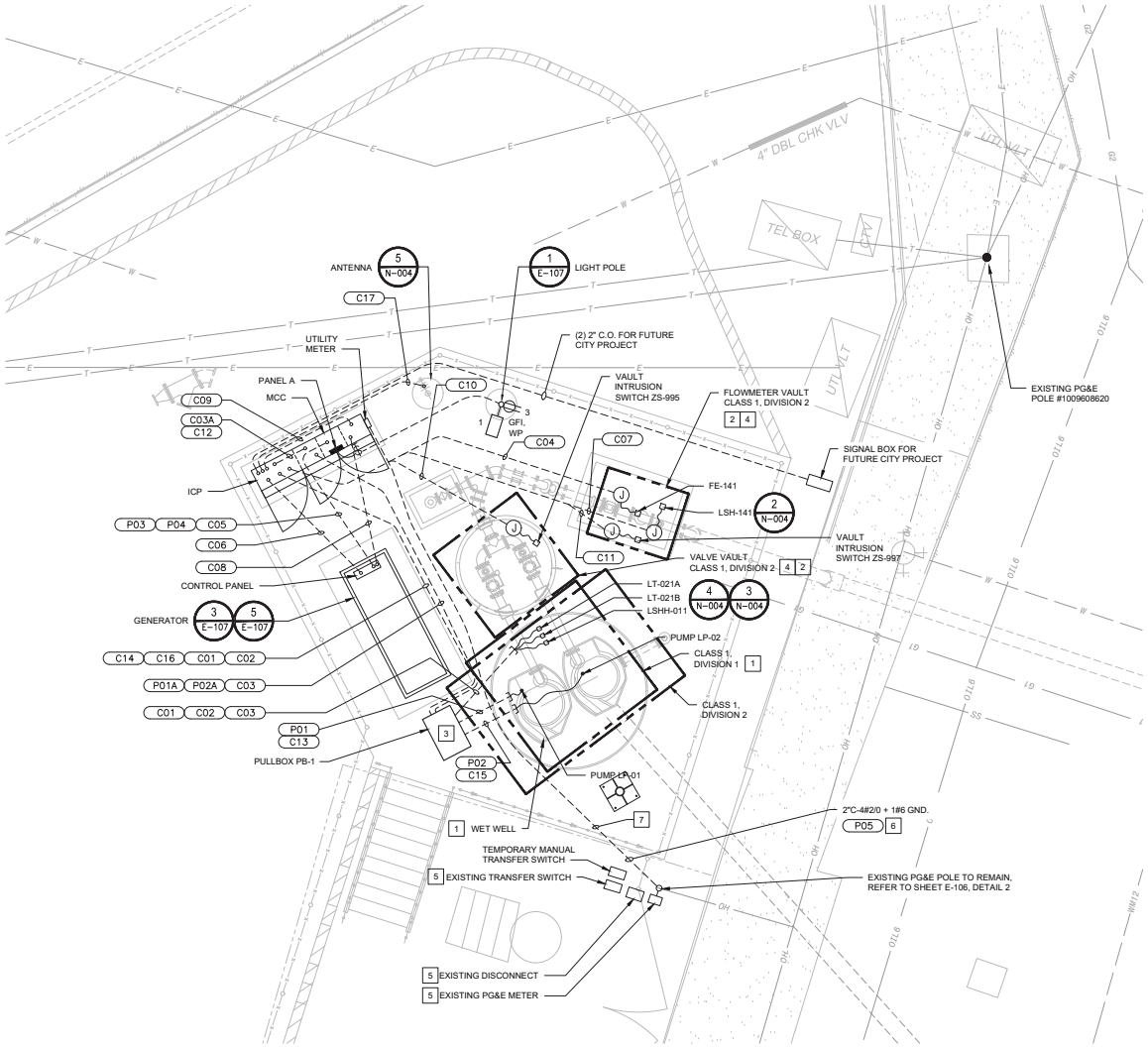

ELECTRICAL SITE PLAN

SCALE: 1/4" = 1'-0"

1
-

NOTES:

1. CLASS I, DIV. 1 HAZARDOUS AREA WITHIN WET WELL.
2. CLASS I, DIV. 2 HAZARDOUS AREA WITHIN VAULTS.
3. 2'W x 3'L x 3'D IN GRADE PULLBOX. H2O TRAFFIC RATED. LABEL COVER "ELECTRICAL". PROVIDE EXPLOSION PROOF (CLASS 1, DIV. 2) CONDUIT SEALS INSIDE THE PULLBOX.
4. PROVIDE EXPLOSION PROOF SEAL FOR ALL CONDUITS ENTERING AND LEAVING HAZARDOUS AREA.
5. REMOVE AND DISPOSE OF EXISTING ELECTRICAL PANEL AND ASSOCIATED CONDUIT AND WIRE AFTER INTERIM PHASE.
6. EXTEND CONDUIT AND CABLES TO TOP OF POLE. REFER TO SHEET E-102, DETAIL 1 AND SHEET E-106, DETAIL 2.
7. MAINTAIN 12" MINIMUM SEPARATION FROM OTHER CONDUITS, WATER LINES AND GAS LINES.

N

0 4' 8'

1/4" = 1'-0

PROJECT TITLE:

CALLE JOAQUIN LIFT STATION REPLACEMENT

SHEET TITLE:

CALLE JOAQUIN LIFT STATION
ELECTRICAL SITE PLAN

REGISTERED PROFESSIONAL ENGINEER
ALLEN J. RANDLE
No. E9606
ELECTRICAL
STATE OF CALIFORNIA

DESIGNED BY:	CU/NG
DRAWN BY:	DD
CHECKED BY:	AR
APPROVED BY:	
SCALE:	
DATE:	OCTOBER 2020
CITY SPECIFICATION NO.	91133
DRAWING NO:	E-103
SHEET NO.	48 of 56

DWG: \\Ussgr\prjmgr\01\bwa\Work\ch_of_wr lab ochs\60195711 - calle joaquin IW wells\WC and pA\02-plans\SHT-E-103.dwg USER: DdAndrus3
DATE: Dec 07, 2020 - 4:01pm XREFS: REF-C-TP REF-C-SP REF-C-SP REF-C-SP REF-C-SP REF-C-SP REF-C-SP IMAGES: SLO emblem_bmp__mel_pc.tif

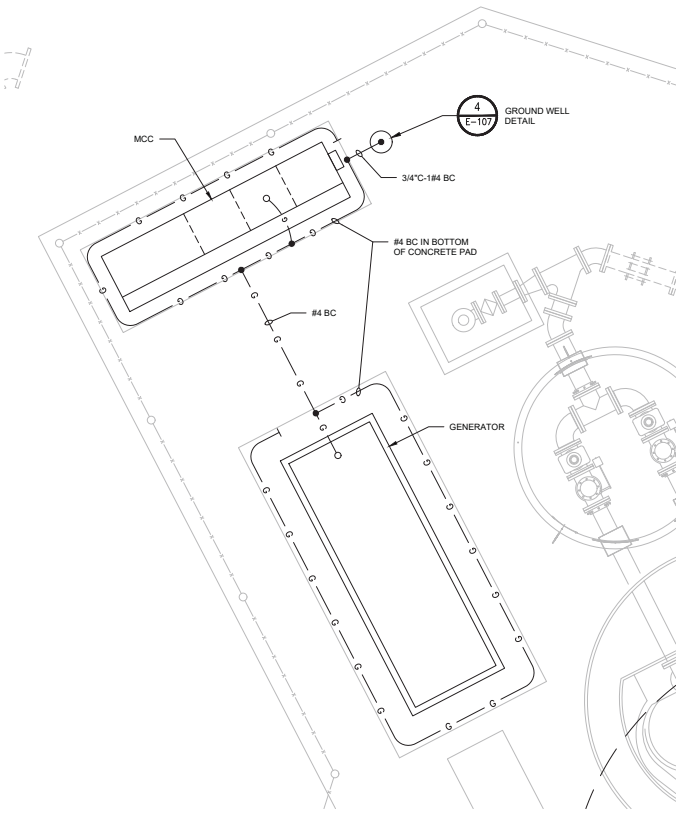

GROUNDING PLAN

SCALE: 1/2" = 1'-0"

1
-

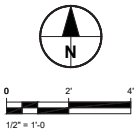

CONDUIT SCHEDULE

CONDUIT SIZE	CONDUIT SIZE	POWER QTY.	POWER SIZE	POWER GROUND QTY.	POWER GROUND SIZE	CONTROL QTY.	CONTROL SIZE	CONTROL GROUND QTY.	CONTROL GROUND SIZE	FROM	TO	REMARKS
P01	2"	MANUFACTURER CABLE								PUMP LP-01	PB-1	INTRINSICALLY SAFE CABLE
P01A	2"	3	#4	1	#8					PB-1 (PUMP LP-01)	MCC	
P02	2"	MANUFACTURER CABLE								PUMP LP-02	PB-1	INTRINSICALLY SAFE CABLE
P02A	2"	3	#4	1	#8					PB-1 (PUMP LP-02)	MCC	
P03	2"	4	#3/0	1	#2					GENERATOR	MCC	
P04	1"	3	#12	1	#12					GENERATOR	MCC (PANEL A)	GEN. HEATER & GEN. BATTERY CHARGER
P05	2"	4	#3/0	1	#2					UTILITY METER	PG&E POWER POLE	COORDINATE POWER POINT OF CONNECTION WITH PG&E
C01	1"	MANUFACTURER CABLE								LT-021A	ICP	
C02	1"	MANUFACTURER CABLE								LT-021B	ICP	
C03	1"	MANUFACTURER CABLE								LSHH-011	MCC	
C03A	1"					4	#14	1	#14	MCC (COMMON CONTROLS)	ICP	LSHH-011, BACKUP SYSTEM ACTIVE
C04	1"	MANUFACTURER CABLE								FE-141	FIT-141	
C05	1"					2	#14	1	#14	GENERATOR	MCC ATS	
C06	1"					10	#14	1	#14	GENERATOR	ICP	GENERATOR AND BATTERY CHARGER SIGNALS
C07	1"					2	#14	1	#14	LSH-141	ICP	
C08	1"					2	#14	1	#14	ATS	GENERATOR	
C09	1"					6	#14	1	#14	ATS	ICP	
C10	1"					2	#14	1	#14	VALVE VAULT INTRUSION SWITCH ZS-995	ICP	
C11	1"					2	#14	1	#14	VAULT INTRUSION SWITCH ZS-997	ICP	
C12	1"					20	#14	1	#14	MCC	ICP	
C13	1"					MANUFACTURER CABLE				PUMP LP-01	PB-1	MOISTURE AND TEMP
C14	1"					4	#14	1	#14	PB-1	MCC	MOISTURE AND TEMP
C15	1"					MANUFACTURER CABLE				PUMP LP-02	PB-1	MOISTURE AND TEMP
C16	1"					4	#14	1	#14	PB-1	MCC	MOISTURE AND TEMP
C17	2"					1	ANTENNA CABLE			ICP-1	NEW ANTENNA	

NAMEPLATE A MTG. MCC MAIN 40A/2P

BUS: AMPS 100 VOLTS: 120/240V, 1PH, 3W

	WATTAGE A	WATTAGE B	OUTLETS LTG	OUTLETS REC	OUTLETS MISC	10,000 AICS 20A-1P U.O.N.		OUTLETS LTG	OUTLETS REC	OUTLETS MISC	WATTAGE A	WATTAGE B	
LIGHTING	300		3			1	2				50		COMMON CONTROLS
RECEPTACLES		180		1		3	4			1		1000	GEN. HEATER
MCC HEATERS	400				4	5	6			1	200		GEN. BATTERY CHARGER
SPARE						7	8						SPARE
						9	10						
						11	12						
SPACE						13	14						SPACE
						15	16						
						17	18						
TOTAL LOAD	700	180									250	1000	TOTAL LOAD

2.1 KW + LCL _____ KW= 2.1 KW AT 240 VOLTS 1PH= 9 AMPS

CITY OF SAN LUIS OBISPO

PROJECT TITLE: **CALLE JOAQUIN LIFT STATION REPLACEMENT**

SHEET TITLE: GROUNDING PLAN, PANEL AND CONDUIT SCHEDULES

REGISTERED PROFESSIONAL ENGINEER ALLEN J. RANDLE No. E9806 ELECTRICAL STATE OF CALIFORNIA

DESIGNED BY: CU/NG
DRAWN BY: DD
CHECKED BY: AR
APPROVED BY:
SCALE:
DATE: OCTOBER 2020
CITY SPECIFICATION NO. 91133
DRAWING NO. E-104
SHEET NO. 49 of 56

DWG \\Uciqc\rrpnqw01\bos\Work\ch_of_san_lub_ostion\60125711 - calle joaquin lift station\dwg\E-104.dwg USER: DDrbrown3
DATE: Dec 07, 2020 - 4:01pm XREFS: REF-P-GP REF-C-GP REF-C-BL CALLE JOAQUIN 2020 REF-C-CP REF-C-GP REF-C-GP IMAGES: SLO_seal.bmp__mw4_pc.tif

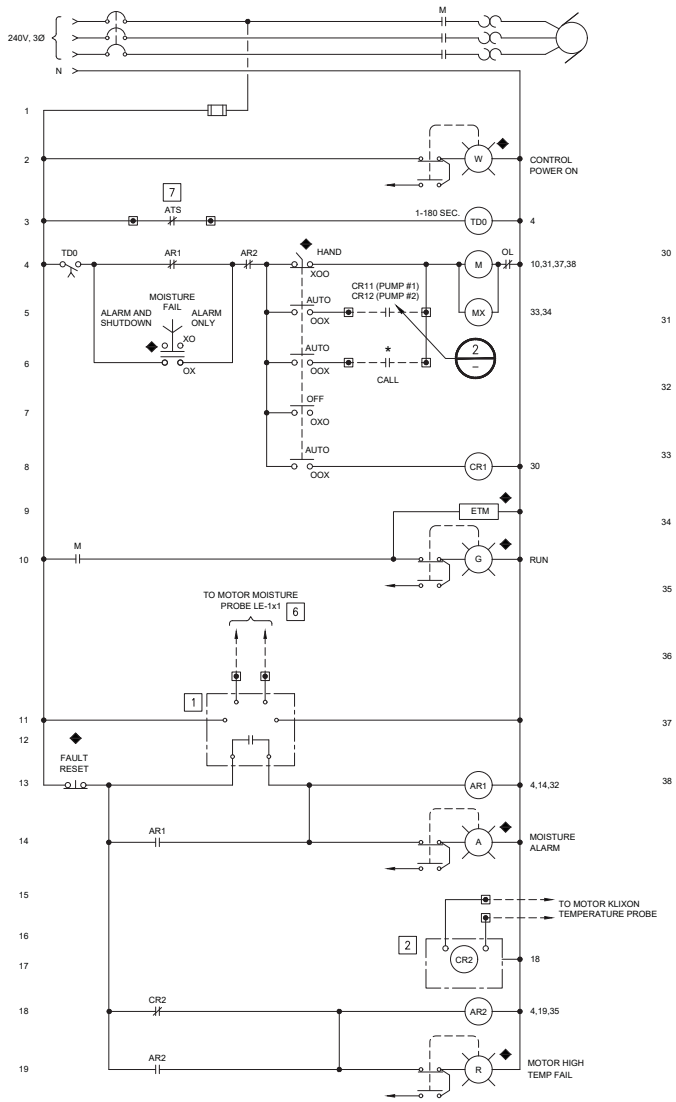

CONTROL SCHEMATIC

PUMP LP-01, PUMP LP-02

1

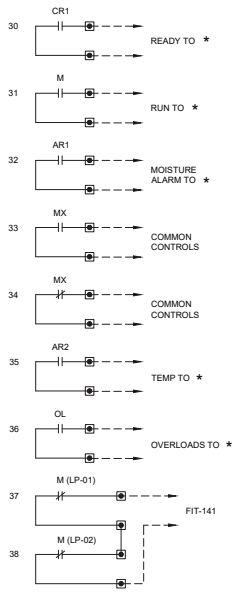

NOTES:

1. CONDUCTIVITY SENSOR RELAY. (SUPPLIED BY PUMP MANUFACTURER TO BE INSTALLED IN STARTER CUBICLE).
2. INSTRINSICALLY SAFE RELAY. WARRICK SERIES 17XXG0
3. CLOSES INSTANTANEOUSLY UPON ENERGIZATION OF RELAY. STARTS TIMING & OPENS UPON TIMING OUT.
4. PROVIDE A WARNING SIGN: "WARNING: DO NOT OPERATE WITH WET WELL EMPTY".
5. SET THESE TIMERS JUST LONG ENOUGH TO PREVENT RACING.
6. THESE CABLES SHALL BE PROVIDED TOGETHER WITH PUMP POWER CABLES BY PUMP MANUFACTURER.
7. OPENS PRIOR TO TRANSFER AND CLOSES AFTER TRANSFER.

SYMBOLS (THIS DWG. ONLY)

* ICP

◆ DOOR MOUNTED

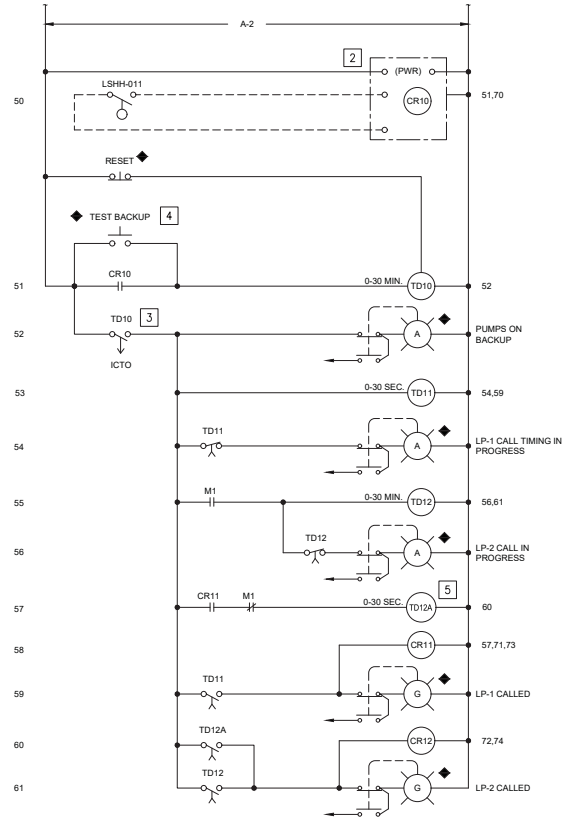

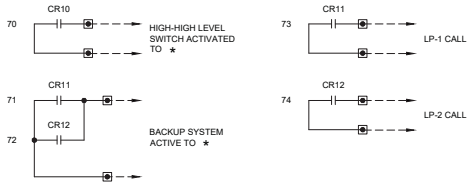

COMMON CONTROLS

2

CITY OF SAN LUIS OBISPO

PROJECT TITLE: **CALLE JOAQUIN LIFT STATION REPLACEMENT**

SHEET TITLE: CONTROL SCHEMATIC DIAGRAMS

REGISTERED PROFESSIONAL ENGINEER ALLEN J. RANDLE No. E9606 ELECTRICAL STATE OF CALIFORNIA

DESIGNED BY:	CU/NG
DRAWN BY:	DD
CHECKED BY:	AR
APPROVED BY:	
SCALE:	
DATE:	OCTOBER 2020
CITY SPECIFICATION NO.	91133
DRAWING NO.	E-105
SHEET NO.	50 of 56

DWG: \\USGSF1FPPW001\Data\Work\city of san luis obispo\60123711 - calle joaquin (BI w/o Ph)\E-105.dwg USER: DHarbusch
DATE: Dec 07, 2020 - 4:01pm XREFS: REF-E-BD, CALLE JOAQUIN 2020 IMAGES: SLO_wmark, Bmp_Sheet_Lic.tif

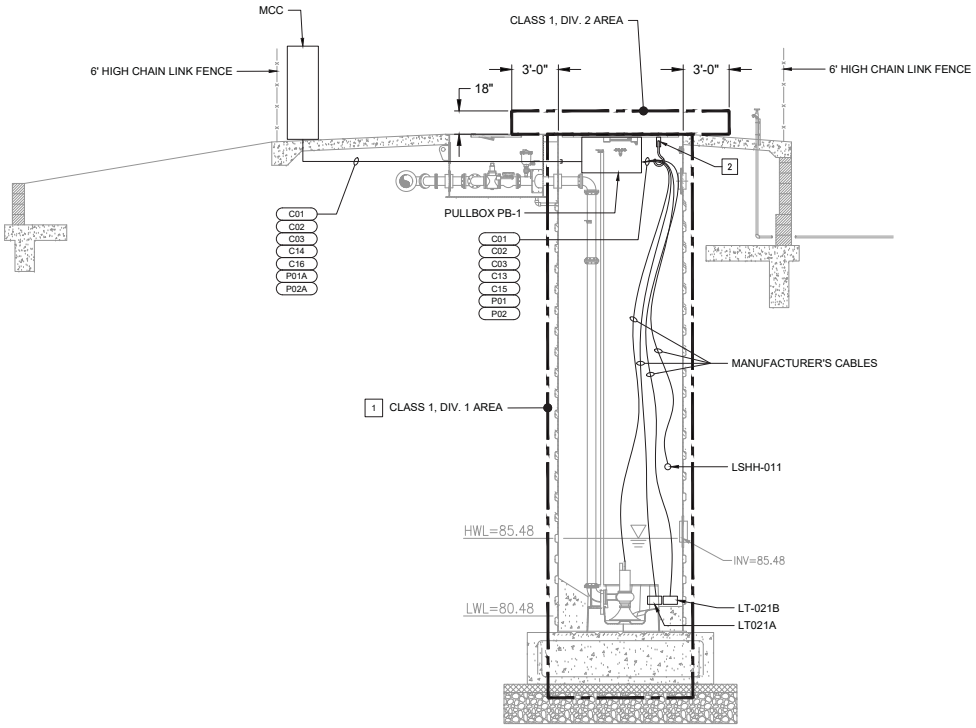

FRP LIFT STATION

SCALE: 1" = 4'-0"

1
-

NOTES:

1. PROVIDE CLASS 1, DIV. 1 SEALS FOR ALL CONDUIT ENTERING OR LEAVING RATED AREAS.
2. 1/2" X 4", 316SST OPEN EYE BOLT, DRILL AND EPOXY IN CONCRETE WALL, 3" EMBEDMENT.

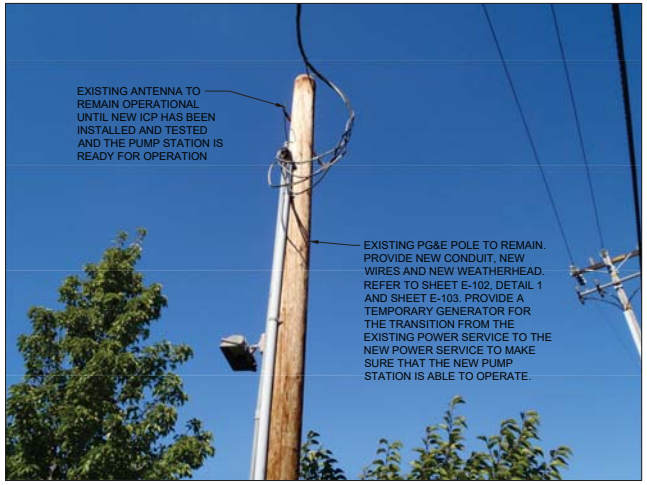

EXISTING PG&E POWER POLE

NOT TO SCALE

2
-

CITY OF SAN LUIS OBISPO

PROJECT TITLE: **CALLE JOAQUIN LIFT STATION REPLACEMENT**

SHEET TITLE: ELECTRICAL DETAILS

REGISTERED PROFESSIONAL ENGINEER
ALLEN J. RANDLE
No. E9606
ELECTRICAL
STATE OF CALIFORNIA

DESIGNED BY:	CU/NG
DRAWN BY:	DD
CHECKED BY:	AR
APPROVED BY:	
SCALE:	
DATE:	OCTOBER 2020
CITY SPECIFICATION NO.	91133
DRAWING NO:	E-106
SHEET NO.	51 of 56

DWG: \\USGS01\PROJECT\Data\Work\ch_of_sm lab_ch\ch\60125711 - calle joaquin PR wwtrm\NEC_cad_std\02-sheets\SHT-E-106.dwg USER: GHbrdsucd0
DATE: Dec 07, 2020 - 4:01pm XREFS: REF-E-BL CALLE JOAQUIN 2020 IMAGES: SLO_wmtrm_lmp_small_v2.tif

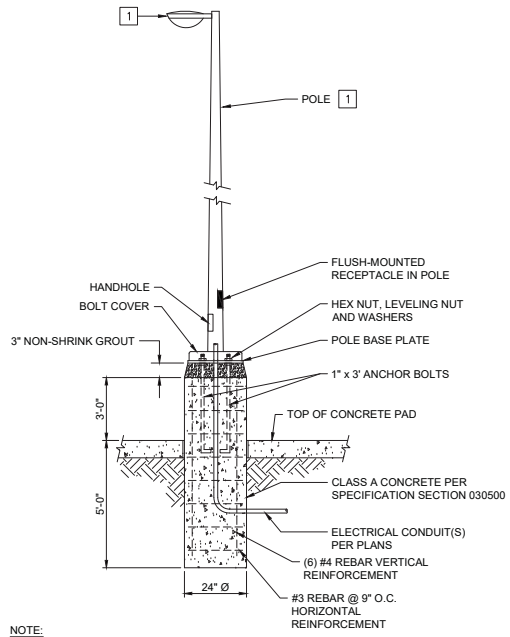

NOTE:

1 FIXTURE TYPE SHALL BE EXTERIOR POLE MOUNTED LED FIXTURE.
CREE XSP LED MOST CURRENT VERSION, TYPE 3 OPTICS, 9612 INITIAL LUMENS,
4000K HIGH EFFICACY MODULE, 120-277V, SILVER COLOR.
PROVIDE WITH FUSE, UTILITY LABEL AND EXTERIOR WATTAGE LABEL.
COMPLY WITH CITY ENGINEERING STANDARD 1010, SECTION G.
POLE SHALL BE 4" ROUND ALUMINUM 20' ABOVE BASE AND RECEPTACLE 18" FROM BASE.
CLEAR ALUMINUM FINISH.

POLE MOUNTED FIXTURE (1)

NOT TO SCALE

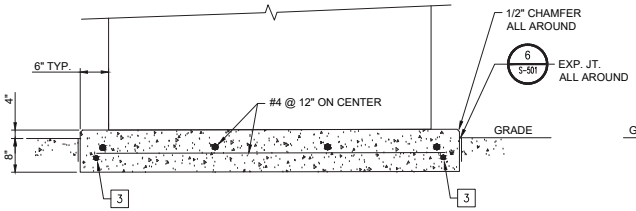

NOTES:

1 CONCRETE SHALL BE CLASS `A'.

2 REINFORCING STEEL SHALL BE GRADE 60 ASTM A615. ALL APPLICABLE REINFORCEMENT SHALL BE IN PLACE AT THE TIME OF INSPECTION.

3 GROUND CONDUCTOR IN SLAB.

CONTROL PANEL PAD DETAIL (1 2 3) (2)

NOT TO SCALE

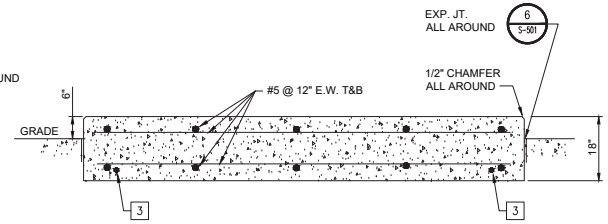

NOTES:

1 CONCRETE SHALL BE CLASS `A'.

2 REINFORCING STEEL SHALL BE GRADE 60 ASTM A615. ALL APPLICABLE REINFORCEMENT SHALL BE IN PLACE AT THE TIME OF INSPECTION.

3 GROUND CONDUCTOR IN SLAB.

GENERATOR PAD DETAIL (1 2 3) (3)

NOT TO SCALE

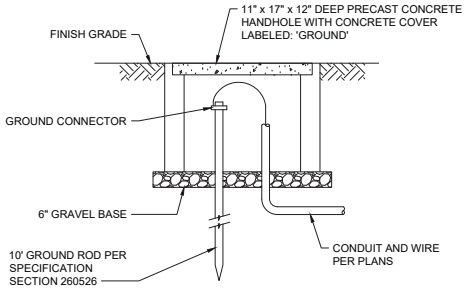

GROUND WELL DETAIL (4)

NOT TO SCALE

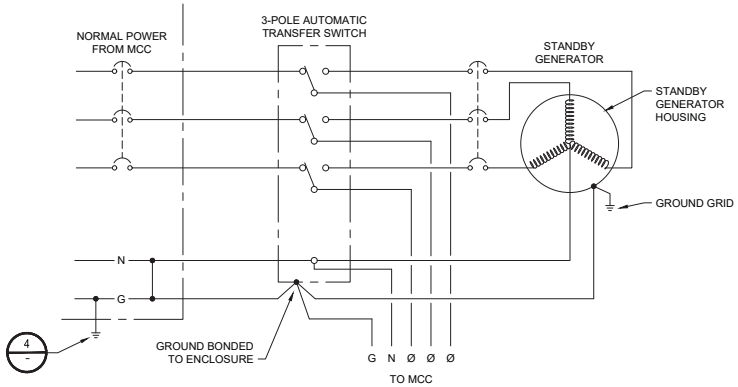

GENERATOR WIRING DIAGRAM (5)

CITY OF SAN LUIS OBISPO

PROJECT TITLE: CALLE JOAQUIN LIFT STATION REPLACEMENT

SHEET TITLE: ELECTRICAL DETAILS

REGISTERED PROFESSIONAL ENGINEER ALLEN J. RANDLE No. E9606 ELECTRICAL STATE OF CALIFORNIA

DESIGNED BY:	CU/NG
DRAWN BY:	DD
CHECKED BY:	AR
APPROVED BY:	
SCALE:	
DATE:	OCTOBER 2020
CITY SPECIFICATION NO.	91133
DRAWING NO:	E-107
SHEET NO.	52 of 56

DWG: \\cosl01\groups01\cosh\work\city of san luis obispo\d0202711 - calle joaquin lift station\d0202711 - calle joaquin lift station-e-107.dwg USER: DBenedosciB
DATE: Dec 07, 2020 - 4:01pm XREFS: REF-E-BLOCKS; CALLE JOAQUIN 2020 IMAGES: SLO em\dem_bmp_dem\dem_bmp_dem\dem_dem

INTERNATIONAL SOCIETY OF AUTOMATION (ISA) TABLE

IDENTIFICATION LETTERS

	FIRST–LETTER		SUCCEEDING–LETTERS		
	MEASURED OR INITIATING VARIABLE	MODIFIER	READOUT OR PASSIVE FUNCTION	OUTPUT FUNCTION	MODIFIER
A	ANALYSIS		ALARM		
B	BURNER, COMBUSTION		USER'S CHOICE	USER'S CHOICE	USER'S CHOICE
C	CONDUCTIVITY			CONTROL	
D	USER'S CHOICE	DIFFERENTIAL			
E	VOLTAGE		SENSOR (PRIMARY ELEMENT)		
F	FLOW RATE	RATIO (FRACTION)			
G	USER'S CHOICE		GLASS, VIEWING DEVICE		
H	HAND				HIGH
I	CURRENT (ELECTRICAL)		INDICATE		
J	POWER	SCAN			
K	TIME, TIME SCHEDULE	TIME RATE OF CHANGE		CONTROL STATION	
L	LEVEL		LIGHT		LOW
M	USER'S CHOICE	MOMENTARY			MIDDLE, INTERMEDIATE
N	USER'S CHOICE		PLC/RTU INPUT	USER'S CHOICE	NORMAL
O	USER'S CHOICE		ORIFICE, RESTRICTION		
P	PRESSURE, VACUUM		POINT (TEST) CONNECTION		
Q	QUANTITY	INTEGRATE, TOTALIZE			
R	RADIATION		RECORD		
S	SPEED, FREQUENCY	SAFETY		SWITCH	
T	TEMPERATURE			TRANSMIT	
U	MULTIVARIABLE		MULTIFUNCTION	MULTIFUNCTION	MULTIFUNCTION
V	VIBRATION, MECHANICAL ANALYSIS			VALVE,DAMPER LOUVER	
W	WEIGHT, FORCE		WELL		
X	UNCLASSIFIED	X AXIS	UNCLASSIFIED(*)	UNCLASSIFIED(*)	UNCLASSIFIED(*)
Y	EVENT, STATE OR PRESENCE	Y AXIS		RELAY, COMPUTE CONVERT	
Z	POSITION, DIMENSION	Z AXIS		DRIVER, ACTUATOR, UNCLASSIFIED FINAL CONTROL ELEMENT	

INSTRUMENT IDENTIFICATION

aa – FIRST LETTER
bb – SUCCEEDING LETTERS
yy – LOOP NO. MODIFIER (USED WITH TWO OR MORE INSTRUMENTS HAVING THE SAME FUNCTIONAL LOOP IDENTIFICATION)
xx – LOOP NO.

aabb
xxyy

FIELD MOUNTED INSTRUMENT

REAR OF PANEL MOUNTED INSTRUMENT

FRONT OF PANEL MOUNTED INSTRUMENT

ROTAMETER

ILLUMINATED HANDSWITCH

PLC (PROGRAMMABLE LOGIC CONTROLLER)

SCS (SUPERVISORY CONTROL STATION)

INTERLOCK

INSTRUMENT LINE SYMBOLS

PRIMARY PROCESS FLOW

SECONDARY PROCESS FLOW, CONNECTION TO PROCESS FLOW, MECHANICAL LINK OR INSTRUMENT SUPPLY

PNEUMATIC SIGNAL OR UNDEFINED SIGNAL FOR PROCESS FLOW DIAGRAMS

CAPILLARY TUBING (FILLED SYSTEM)

ELECTRIC SIGNAL (DISCRETE)

A — ELECTRIC SIGNAL (ANALOG, TSP)

A3 — ELECTRIC SIGNAL (ANALOG, TST)

DATA COMMUNICATION

BUILDING OR FACILITY BOUNDARY

(2) — MULTI–CIRCUIT ELECTRIC SIGNALS (NUMBER OF SIGNALS ILLUSTRATED IN PARENTHESIS)

I–5 01 — LOGICAL OR HARDWIRE SIGNAL NUMBER (SHOWN SIGNAL "01" ORIGINATED IN DWG. I–5)

01 I–5 — LOGICAL OR HARDWIRE SIGNAL NUMBER (SHOWN SIGNAL "01" SENT TO DWG. I–5)

ACTUATORS OR OPERATORS

M — MOTOR (MODULATING)

M — MOTOR (OPEN/CLOSE, START/STOP)

S — SOLENOID

P — PNEUMATIC

PUMPS & COMPRESSORS

CENTRIFUGAL PUMP

VERTICAL TURBINE PUMP

METERING PUMP

SUMP PUMP

PRIMARY ELEMENTS

ULTRASONIC LEVEL SENSOR

FLOW TUBE

ANNUBAR

PROPELLER METER

M — MAGNETIC FLOW METER

V — V–CONE

FLOOD SWITCH

DIAPHRAGM SEAL

VALVES & GATES

BUTTERFLY

GATE

K — KNIFE GATE

SWING CHECK

BALL

GLOBE

DIAPHRAGM

PLUG

ECCENTRIC PLUG

LUBRICATED PLUG

3–WAY GLOBE

BALL CHECK

PRESSURE RELIEF VALVE

PINCH VALVE

M — MOTOR OPERATED BUTTERFLY (MODULATING)

M — MOTOR OPERATED BUTTERFLY (OPEN/CLOSE)

PRESSURE REDUCING REGULATOR

S — SOLENOID CONTROL

S — 3–WAY SOLENOID

NEEDLE VALVE

PINCH VALVE

DIAPHRAGM ACTUATED

PRESSURE RELIEF

EDUCTOR

MIXER

INSTRUMENT ABBREVIATIONS

AL	ALARM
AC	ALTERNATING CURRENT
AI	ANALOG INPUT
AO	ANALOG OUTPUT
AM	AUTO–MANUAL
AMR	AUTO–MANUAL–REMOTE
AVG	AVERAGE
BW	BACKWASH
CA	COMMON ALARM
C	CLOSE
CCC	CENTRAL CONTROL CENTER
CL	CHLORINE
DC	DIRECT CURRENT
DI	DISCRETE INPUT
DO	DISCRETE OUTPUT
ETM	ELAPSED TIME METER
HOA	HAND–OFF–AUTO
HLO	HIGH–LOW–OFF
HL	HIGH–LOW
HLOR	HIGH–LOW–OFF–REMOTE
I/O	INPUT/OUTPUT
LL	LOCAL LEVEL
LP	LOCAL PRESSURE
LR	LOCAL–REMOTE
LOS	LOCK–OUT–STOP
LOR	LOCAL–OFF–REMOTE
LPU	LINE PROTECTION UNIT
LCP	LOCAL CONTROL PANEL
MCC	MOTOR CONTROL CENTER
MCS	MASTER CONTROL STATION
MODEM	MODULATE–DEMODULATE
OIC	OPEN–INTERMEDIATE–CLOSED
OSCA	OPEN–STOP–CLOSE–AUTO
OOR	ON–OFF–REMOTE
O	OPEN
OO	ON–OFF
OOA	ON–OFF–AUTO
ORO	OFF–RESET–ON
OC	OPEN–CLOSE
OSC	OPEN–STOP–CLOSE
OSCR	OPEN–STOP–CLOSE–REMOTE
OCA	OPEN–CLOSE–AUTO
P/A	PULSE TO ANALOG
PF	PULSE FREQUENCY
PD	PULSE DURATION
PID	PROPORTIONAL–INTEGRAL–DERIVATIVE
PLC	PROGRAMMABLE LOGIC CONTROLLER
PS	DC POWER SUPPLY
P&ID	PROCESS & INSTRUMENTATION DIAGRAM
PRV	PRESSURE RELIEF VALVE
PRPRV	PRESSURE REDUCING–PRESSURE RELIEF VALVE
RIOP	REMOTE I/O PANEL
RSP	REMOTE SET POINT
RTD	RESISTANCE TEMPERATURE DETECTOR
RTDI	RTD INPUT MODULE
RTU	REMOTE TERMINAL UNIT
SCS	SUPERVISORY CONTROL STATION
SS	START–STOP
SP	SET POINT
TSP	TWISTED SHIELDED PAIR
TST	TWISTED SHIELDED TRIAD
TURB	TURBIDITY
TPC	TIME PROPORTIONAL CONTROL
TOT	TOTALIZATION
TEMP	TEMPERATURE

0 1/2 1
IF THIS BAR DOES NOT MEASURE 1" THEN DRAWING IS NOT TO FULL SCALE

811 Know what's below. Call before you dig.

CITY OF SAN LUIS OBISPO

PROJECT TITLE: CALLE JOAQUIN LIFT STATION REPLACEMENT

SHEET TITLE: INSTRUMENTATION LEGEND AND SYMBOLS

REGISTERED PROFESSIONAL ENGINEER DANIEL S. CROSSLEY No. 73077 CIVIL STATE OF CALIFORNIA

DESIGNED BY:	MJ
DRAWN BY:	MG
CHECKED BY:	GY
APPROVED BY:	
SCALE:	SEE DWG
DATE:	OCTOBER 2020
CITY SPECIFICATION NO.	91133
DRAWING NO.	N-001
SHEET NO.	53 of 56

DWG: \\USSWFIPPSWO01\Data\Work\city of san luis obispo\60225711 – calle joaquin lift station\WOD_cost_sph\02–sheets\N–001.dwg USER: GHilderbrand2D
DATE: Dec 07, 2020 4:01pm XREFS: REF–c–BB; CALLE JOAQUIN 2020 IMAGES: SLO emblem_bmp; mapt_sc.tif

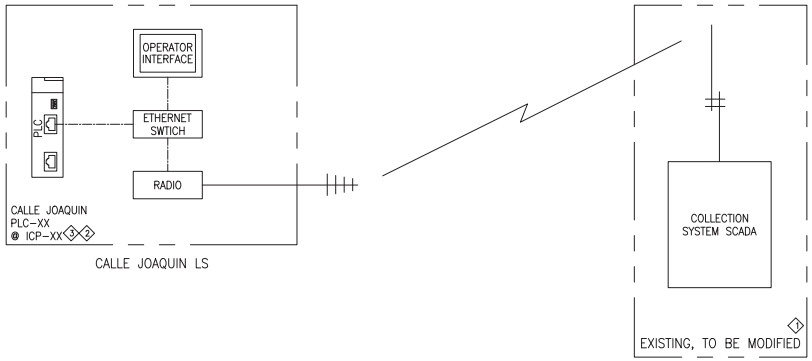

NOTES

1. SCADA ONLY TO BE MODIFIED.
2. EXISTING RTU TO BE DEMOLISHED AT COMPLETION.
3. NEW PLC & ICP NUMBER WILL BE PROVIDED BY CITY.
4. REUSE EXISTING ANTENNA AND POLE.

WIRING LEGEND

— - —— - —— - — ETHERNET (WIRE)

0 1/2 1

IF THIS BAR DOES NOT MEASURE 1" THEN DRAWING IS NOT TO FULL SCALE

811 Know what's below. Call before you dig.

CITY OF SAN LUIS OBISPO

PROJECT TITLE: CALLE JOAQUIN LIFT STATION REPLACEMENT

SHEET TITLE: COMMUNICATION BLOCK DIAGRAM

REGISTERED PROFESSIONAL ENGINEER DANIEL S. CROSSLEY No. 73077 CIVIL STATE OF CALIFORNIA

DESIGNED BY:	KR
DRAWN BY:	SA
CHECKED BY:	AR
APPROVED BY:	
SCALE:	SEE DWG
DATE:	OCTOBER 2020
CITY SPECIFICATION NO.	91133
DRAWING NO.	N-002
SHEET NO.	54 of 56

DWG: \\USSWFPPSPWO1\Data\Work\city of san luis obispo\60225711 - calle joaquin lift station\WO_cost_sph\02-sheets\N-002.dwg USER: GilbertoJ03
DATE: Dec 07, 2020 4:02pm XREFS: REF-c-BB, CALLE JOAQUIN 2020 IMAGES: SLO emblem_bmp, mad_sc.tif

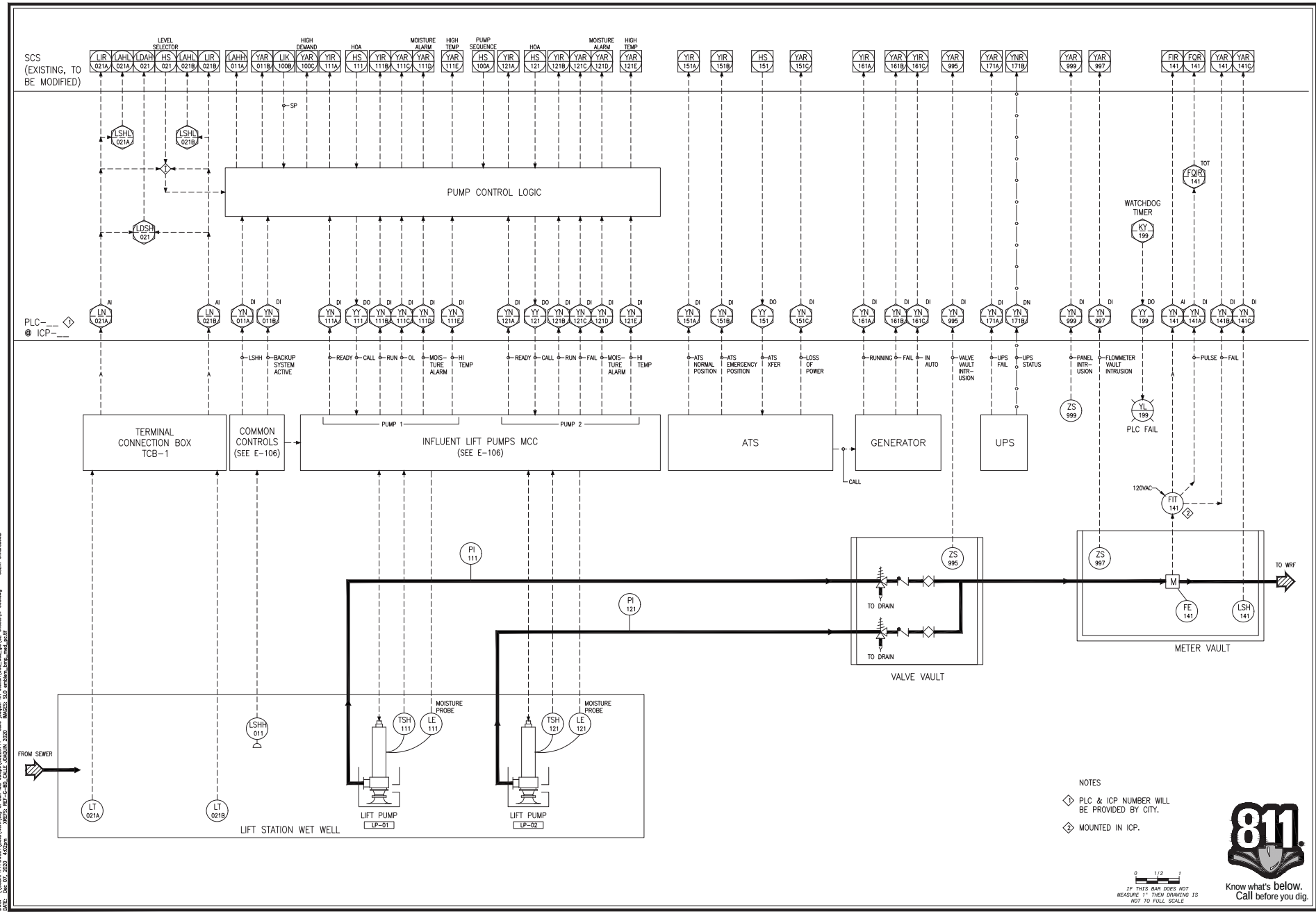

NOTES

1. PLC & ICP NUMBER WILL BE PROVIDED BY CITY.
2. MOUNTED IN ICP.

0 1/2 1
IF THIS BAR DOES NOT MEASURE 1" THEN DRAWING IS NOT TO FULL SCALE

811 Know what's below. Call before you dig.

CITY OF SAN LUIS OBISPO

PROJECT TITLE: CALLE JOAQUIN LIFT STATION REPLACEMENT

SHEET TITLE: CALLE JOAQUIN LIFT STATION P&ID

REGISTERED PROFESSIONAL ENGINEER DANIEL S. CROSSLEY No. 73077 CIVIL STATE OF CALIFORNIA

DESIGNED BY:	KR
DRAWN BY:	SA
CHECKED BY:	AR
APPROVED BY:	
SCALE:	SEE DWG
DATE:	OCTOBER 2020
CITY SPECIFICATION NO.	91133
DRAWING NO.	N-003
SHEET NO.	55 of 56

DWG: \\USSWFIPPSPWO1\Data\Work\city of san luis obispo\60225711 - calle joaquin lift station\WO_cost_sph\02-sheets\N-003.dwg USER: GilberdusC0
DATE: Dec 07, 2020 4:02pm XREFS: REF-c-BB, CALLE JOAQUIN 2020 IMAGES: SLO emblem_bmp, mad_sc.tif

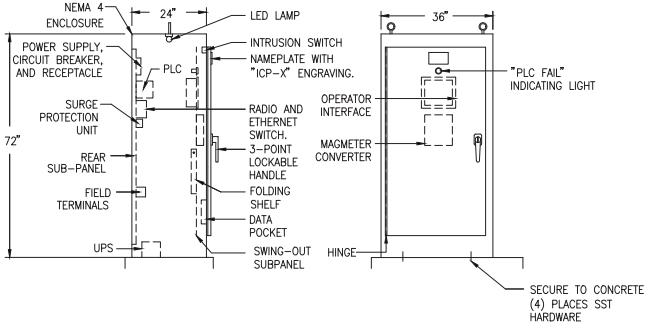

INSTRUMENT CONTROL PANEL (ICP) LAYOUT (1)
NTS

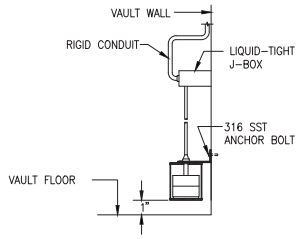

VAULT- FLOOD LEVEL SWITCH (2)
NTS

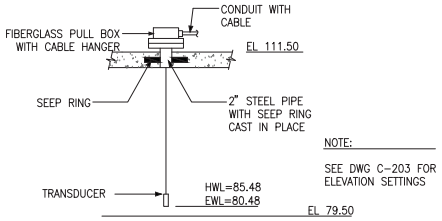

SUBMERSIBLE LEVEL TRANSDUCER (3)
NTS

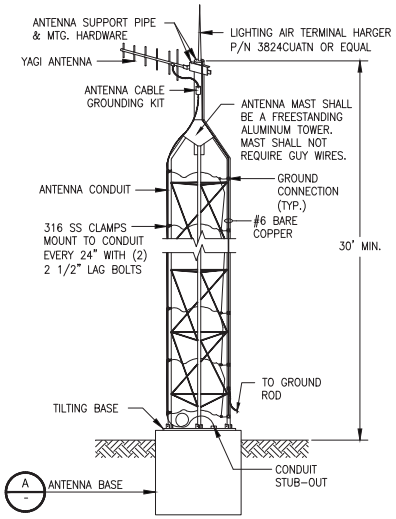

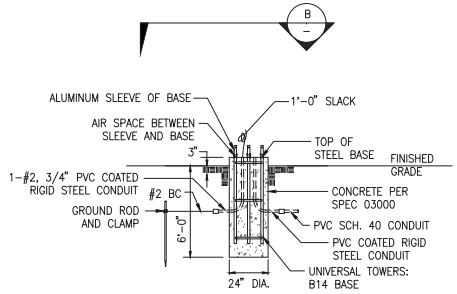

NOTE: CONCRETE TO BE POURED TO TOP OF TUBES ON THE BASE. (THE ONLY AIR SPACE SHOULD BE BETWEEN THE BOTTOM OF THE ALUMINUM SLEEVES OF THE BASE AND THE TOP OF THE STEEL TUBES OF THE BASE).

ANTENNA MAST BASE DETAIL (A)
SCALE: NONE

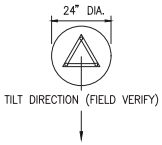

SECTION (B)
SCALE: NONE

ANTENNA MAST DETAIL (UNIVERSAL TOWERS MODEL #4-30) (5)
SCALE: NONE.

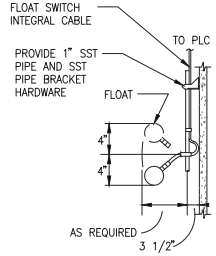

FLOAT SWITCH (4)
NTS

0 1/2 1
IF THIS BAR DOES NOT MEASURE 1" THEN DRAWING IS NOT TO FULL SCALE

811 Know what's below. Call before you dig.

CITY OF SAN LUIS OBISPO

CALLE JOAQUIN LIFT STATION REPLACEMENT

INSTRUMENTATION DETAILS

PROJECT TITLE:

SHEET TITLE:

REGISTERED PROFESSIONAL ENGINEER DANIEL S. CROSSLIN No. 73077 CIVIL STATE OF CALIFORNIA

DESIGNED BY:	KR
DRAWN BY:	SA
CHECKED BY:	AR
APPROVED BY:	
SCALE:	SEE DWG
DATE:	OCTOBER 2020
CITY SPECIFICATION NO.	91133
DRAWING NO.	N-004
SHEET NO.	56 of 56

DWG: \\USSWFIPPSPWO1\Data\Work\city of san luis obispo\60225711 - calle joaquin lift station\N00_cad_qa\02-sheets\N-004.dwg USER: GAbardusc0
DATE: Dec 07, 2020 4:02pm XREFS: REF-c-BR, CALLE JOAQUIN 2020 IMAGES: SLO emblem_bmp_mad_sc.tif